YAMAHA

PARTS CATALOGUE

YFM66FAV (2C69) U.S.A.
YFM66FAV (2C6A) CANADA
YFM66FAV (2C6B) EUROPE
YFM66FAV (2C6C) OCEANIA
YFM660FWA (2C69) JAPAN

1E2C6-100EA

(2E2C6-100EA)

YAMAHA
GENUINE
Parts & Accessories

YFM66FAV/YFM660FWA
PARTS CATALOGUE
©2005 by Yamaha Motor Co., Ltd.
1st edition, May 2005
All rights reserved.
Any reprinting or unauthorized use
without the written permission of
Yamaha Motor Co., Ltd.
is expressly prohibited.
Printed in Japan.

A3

A4

FOREWORD

This Parts Catalogue is related to the parts for the model(s) on the cover page. When you are ordering replacement parts, please refer to this Parts Catalogue and quote both part numbers and part names correctly.

1. Modifications or additions which have been made after the issue of the Parts Catalogue will be announced in the Parts News.
   It is advisable that you make the necessary corrections to the Parts Catalogue according to the Parts News.

2. Abbreviations
   The following abbreviations are used in this Parts Catalogue.

   "UR" Use specified parts number.
   "UN" Use as many as needed.
   "AP" Alternate Parts
   "LM" Locally Made (Parts need to be ordered locally)
   "F#" Frame No. (Applicable machine No.)
   "O/S" Over Size

3. The number of components for assembly
   - Parts, which are to be supplied in an assembly, are listed with a dot (.) in front of the part name as shown below.
   - The numeral appearing to the right of each component part indicates the quantity of parts for each assembly unit.

PART NO.	DESCRIPTION	Q'TY	REMARKS
2F5–83310–60	FRONT FLASHER LIGHT ASSY	2	
115–83311–60	.BULB (6V–18W)	1	

4. Applicable colours of graphics are represented in the "REMARKS" as shown below.

PART NO.	DESCRIPTION	Q'TY	REMARKS
2N4–24110–00–X5	FUEL TANK COMP.	2	MXR
3J1–24240–10	.GRAPHIC, FUEL TANK	1	FOR MXR

5. Note that the illustrations for reference in finding parts numbers are not to be used for assembling. When assembling, please use the applicable service manual.

6. The asterisk (*) before a reference number indicates modified items after the first edition.

7. Applicable Serial No.

Engine Serial No.

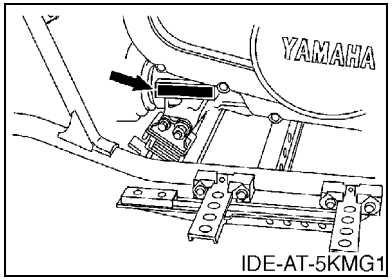

Frame Serial No.

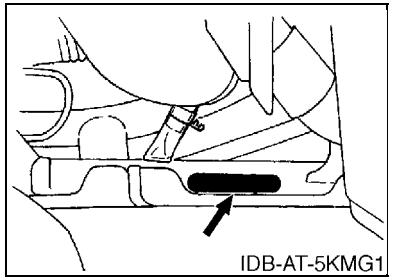

8. Applicable Colour Code (The (*) mark shows Model colour.)

Abbreviation	Colour Name	Colour Code
DPBSE(*)	DEEP PURPLISH BLUE SOLID E	0583
DPBSN(*)	DARK PURPLISH BLUE SOLID N	0891
PDG(*)	PASTEL DEEP GREEN	00K0
RTR(*)	ROMANTIQUE ROUGE	00TR

9. Quantity Column Information

Column No.	Name Of Q'ty Column	Destination
1	USA	U.S.A.
2	CAN	CANADA
3	EUR	EUROPE
4	OCE	AUSTRALIA, NEW ZEALAND
5	JPN	JAPAN

MODEL LABEL

(1) A label called “Model Label” is affixed in the location as indicated in (3) below.
When using this parts catalogue, please be sure to cross–reference the “model code – production code No.” in the catalogue with the “model code – production code No.” indicated on the Model Label affixed onto the product concerned.

(2) “Model Label” Indication

a b
○ xxxx – xxx
● x c

a: Model Type Code
b: Production Code No.
c: Colouring Type

○ 4TW1–010
● A

(3) Model Label Affixing Location

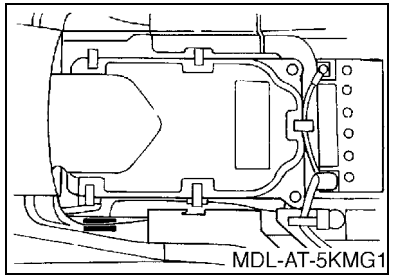

(4) Colouring Information

Model Code	Colouring Type Code	Colour Code	Colour Name	Abbreviation
2C69	A	00K0	PASTEL DEEP GREEN	PDG
	B	00TR	ROMANTIQUE ROUGE	RTR
	C	0891	DARK PURPLISH BLUE SOLID N	DPBSN
2C6A	A	00K0	PASTEL DEEP GREEN	PDG
	B	00TR	ROMANTIQUE ROUGE	RTR
	C	0891	DARK PURPLISH BLUE SOLID N	DPBSN
2C6B	A	00K0	PASTEL DEEP GREEN	PDG
	B	00TR	ROMANTIQUE ROUGE	RTR
	D	0583	DEEP PURPLISH BLUE SOLID E	DPBSE
2C6C	D	0583	DEEP PURPLISH BLUE SOLID E	DPBSE

(5) Model Code – Production Code Number of Model Listed in This Parts Catalogue

Model Code	Production Code No.	Country (destination)
2C69	010	U.S.A.
	020	JAPAN
2C6A	010	CANADA
2C6B	010	EUROPE
2C6C	010	AUSTRALIA
		NEW ZEALAND

Model Code	Production Code No.	Country (destination)

CONTENTS

ENGINE

CYLINDER HEAD B2
CYLINDER B4
CRANKSHAFT & PISTON B5
VALVE B7
CAMSHAFT & CHAIN B8
WATER PUMP B9
RADIATOR & HOSE B10
INTAKE B12
OIL PUMP B13
CARBURETOR B15
EXHAUST C3
CRANKCASE C5
CRANKCASE COVER 1 ..... C7
STARTER C9
STARTER CLUTCH C10
CLUTCH C11
TRANSMISSION C13
MIDDLE DRIVE GEAR C15
SHIFT CAM & FORK D3
SHIFT SHAFT D5

CHASSIS

FRAME D7
FRONT FENDER D9
REAR FENDER D11
SIDE COVER D12
REAR ARM D13
DRIVE SHAFT D14
FRONT DIFFERENTIAL E3
REAR SUSPENSION E5
FRONT SUSPENSION & WHEEL E6
STEERING E7
FUEL TANK E8
SEAT E10
FRONT WHEEL E11
FRONT BRAKE CALIPER E13
REAR WHEEL E14
REAR BRAKE CALIPER F2
STEERING HANDLE & CABLE F3
FRONT MASTER CYLINDER F4
STAND & FOOTREST F5
REAR MASTER CYLINDER F6
GUARD F8
GENERATOR F9
STARTING MOTOR F10
METER F11
HEADLIGHT F12
TAILLIGHT F13
TAILLIGHT 2 ..... F14
HANDLE SWITCH & LEVER F15
ELECTRICAL 1 ..... G2
ELECTRICAL 2 ..... G6
EMBLEM & LABEL 1 ..... G7
EMBLEM & LABEL 2 ..... G8
EMBLEM & LABEL 3 ..... G10
EMBLEM & LABEL 4 ..... G11
EMBLEM & LABEL 5 ..... G12

INDEX

NUMERICAL INDEX M1

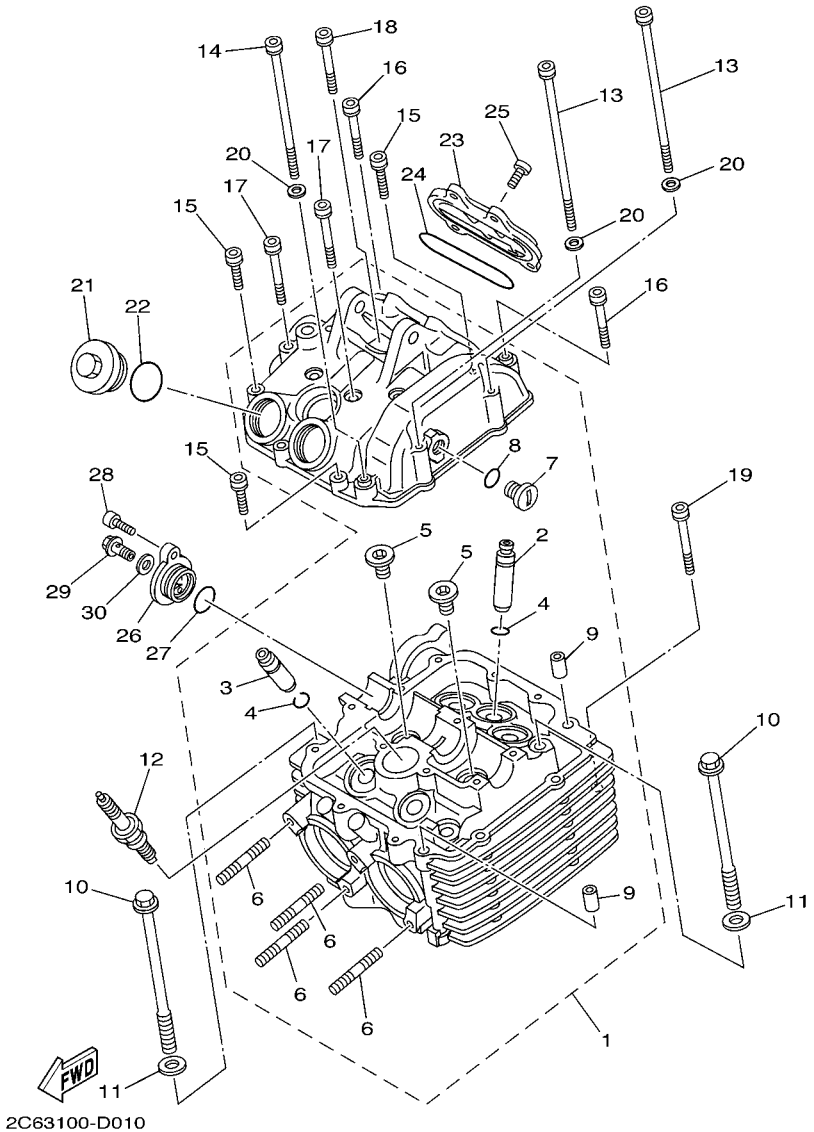

FIG. 1 CYLINDER HEAD

REF. NO.	PART NO.	DESCRIPTION	USA	CAN	EUR	OCE	JPN	REMARKS
1	5KM–11101–01	CYLINDER HEAD ASSY	1	1	1	1	1	
2	5KM–11133–10	.GUIDE, VALVE 1	3	3	3	3	3	
3	5KM–11134–10	.GUIDE, VALVE 2	2	2	2	2	2	
4	93440–10085	.CIRCLIP	5	5	5	5	5	
5	90340–18101	.PLUG, STRAIGHT SCREW	2	2	2	2	2	
6	95617–08625	.BOLT, STUD	4	4	4	4	4	
7	90340–14117	.PLUG, STRAIGHT SCREW	1	1	1	1	1	
8	93210–13657	.O-RING	1	1	1	1	1	
9	99530–10116	.PIN, DOWEL	2	2	2	2	2	
10	90105–09648	BOLT, FLANGE	4	4	4	4	4	
11	90201–096J9	WASHER, PLATE	4	4	4	4	4	
12	94701–00241	PLUG, SPARK (NGK DPR8EA-9)	1	1	1	1		
	94703–00241	PLUG, SPARK (NGK DPR8EA-9)					1	
13	91317–06130	BOLT	2	2	2	2	2	
14	91317–06115	BOLT	1	1	1	1	1	
15	91317–06025	BOLT	5	5	5	5	5	
16	91317–06040	BOLT	2	2	2	2	2	
17	91317–06055	BOLT	6	6	6	6	6	
18	90109–063E9	BOLT	1	1	1	1	1	
19	91317–06050	BOLT	1	1	1	1	1	
20	92907–06600	WASHER, PLATE	3	3	3	3	3	
21	1L9–11186–00	COVER, CYLINDER HEAD SIDE 2	2	2	2	2	2	
22	93210–32172	O-RING	2	2	2	2	2	
23	3YF–11187–00	COVER, CYLINDER HEAD SIDE 3	1	1	1	1	1	
24	93210–71360	O-RING	1	1	1	1	1	
25	91317–06018	BOLT	4	4	4	4	4	
26	3TB–12215–01	CAP, TENSIONER CASE	1	1	1	1	1	

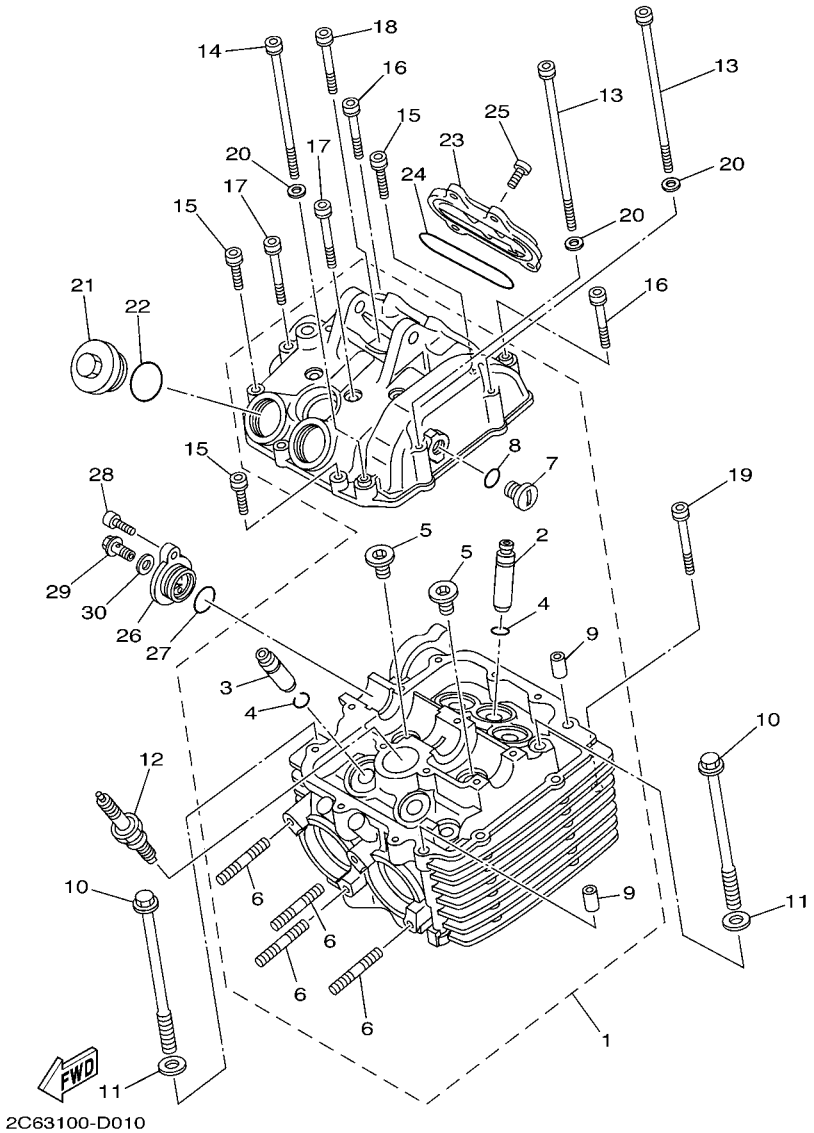

FIG. 1 CYLINDER HEAD

REF. NO.	PART NO.	DESCRIPTION	USA	CAN	EUR	OCE	JPN	REMARKS
27	93210–19522	O-RING	1	1	1	1	1	
28	90110–06093	BOLT, HEXAGON SOCKET HEAD	1	1	1	1	1	
29	90401–06001	BOLT, UNION	1	1	1	1	1	
30	90430–06192	GASKET	1	1	1	1	1	

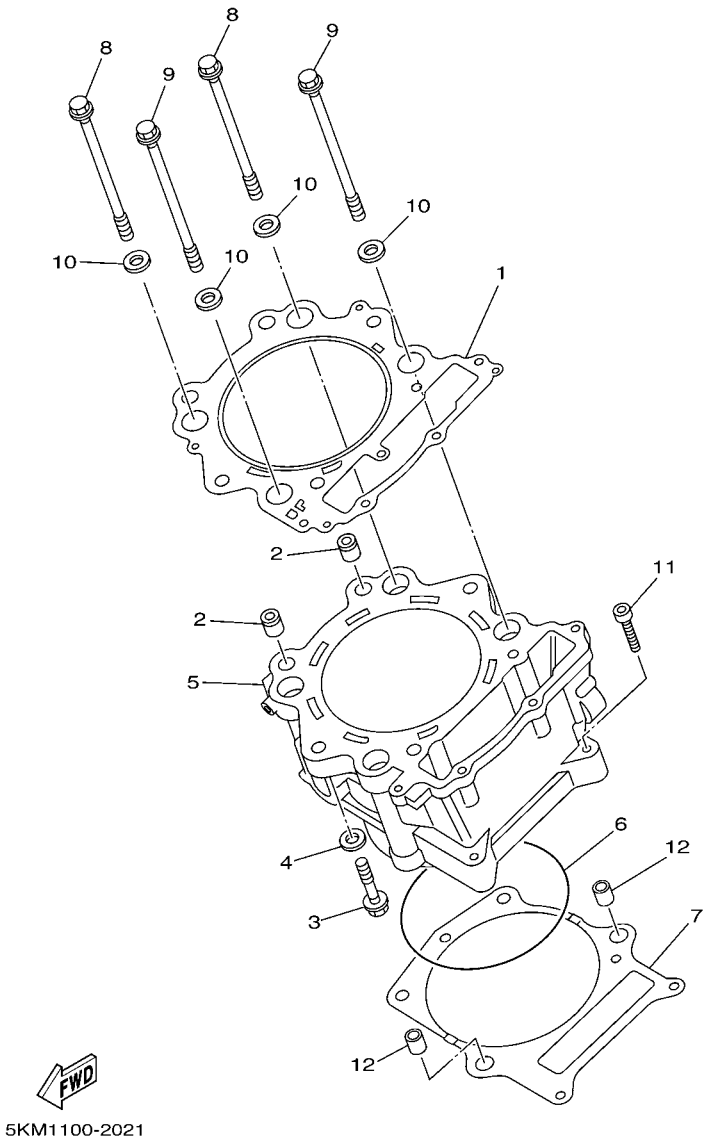

FIG. 2 CYLINDER

REF. NO.	PART NO.	DESCRIPTION	USA	CAN	EUR	OCE	JPN	REMARKS
1	3YF–11181–00	GASKET, CYLINDER HEAD 1	1	1	1	1	1	
2	93612–16254	PIN, DOWEL	2	2	2	2	2	
3	90105–09647	BOLT, FLANGE	2	2	2	2	2	
4	90201–096J9	WASHER, PLATE	2	2	2	2	2	
5	5KM–11310–00	CYLINDER	1	1	1	1	1	
6	93211–01467	O-RING	1	1	1	1	1	
7	5KM–11351–00	GASKET, CYLINDER	1	1	1	1	1	
8	90105–10649	BOLT, FLANGE	2	2	2	2	2	
9	90105–10650	BOLT, FLANGE	2	2	2	2	2	
10	90201–101A4	WASHER, PLATE	4	4	4	4	4	
11	91317–06040	BOLT	2	2	2	2	2	
12	99530–14016	PIN, DOWEL	2	2	2	2	2	

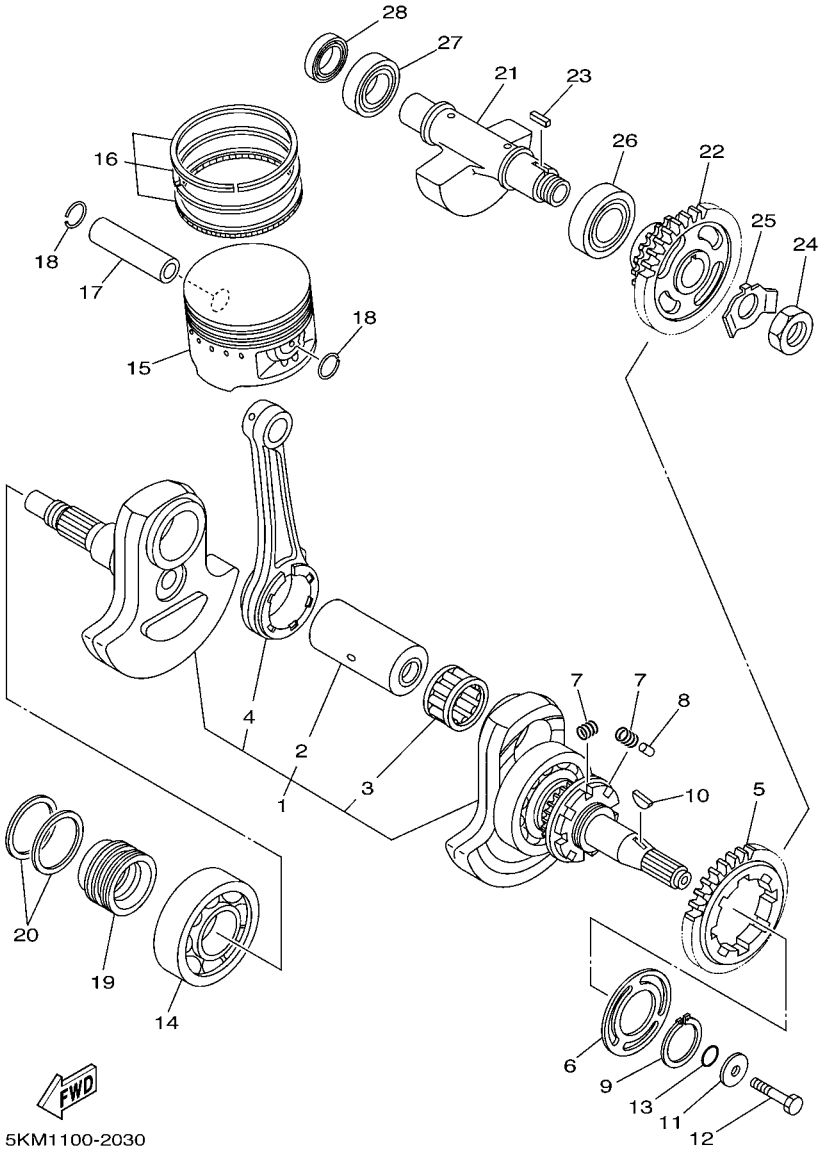

FIG. 3 CRANKSHAFT & PISTON

REF. NO.	PART NO.	DESCRIPTION	USA	CAN	EUR	OCE	JPN	REMARKS
1	5KM–11400–00	CRANKSHAFT ASSY	1	1	1	1	1	
2	5KM–11681–00	.PIN, CRANK 1	1	1	1	1	1	
3	93310–637D3	.BEARING	1	1	1	1	1	
4	5LP–11651–00	.ROD, CONNECTING	1	1	1	1	1	
5	5KM–11536–00	GEAR, DRIVE	1	1	1	1	1	
6	5KM–11565–00	WASHER, BEARING COVER	1	1	1	1	1	
7	90501–220A1	SPRING, COMPRESSION	8	8	8	8	8	
8	93606–09002	PIN, DOWEL	4	4	4	4	4	
9	99009–35400	CIRCLIP	1	1	1	1	1	
10	90280–16053	KEY, WOODRUFF	1	1	1	1	1	
11	90201–10321	WASHER, PLATE	1	1	1	1	1	
12	90101–10568	BOLT	1	1	1	1	1	
13	93210–16290	O-RING	1	1	1	1	1	
14	93306–30702	BEARING	1	1	1	1	1	
15	3YF–11631–00–X0	PISTON (STD)	1	1	1	1	1	
	3YF–11636–00	PISTON (0.50MM O/S)	1	1	1	1	1	AP
	3YF–11638–00	PISTON (1.00MM O/S)	1	1	1	1	1	AP
16	2C6–11603–00	PISTON RING SET (STD)	1	1	1	1	1	
	2C6–11605–00	PISTON RING SET (0.50MM O/S)	1	1	1	1	1	AP
	2C6–11607–00	PISTON RING SET (1.00MM O/S)	1	1	1	1	1	AP
17	3YF–11633–01	PIN, PISTON	1	1	1	1	1	
18	93450–24028	CIRCLIP	2	2	2	2	2	
19	5KM–16181–00	SPACER 1	1	1	1	1	1	
20	5KM–11447–00	SEAL, CRANK	2	2	2	2	2	
21	5KM–11454–10	WEIGHT 1	1	1	1	1	1	
22	5KM–11530–00	BALANCER WEIGHT GEAR COMP.	1	1	1	1	1	
23	90282–05005	KEY, STRAIGHT	1	1	1	1	1	

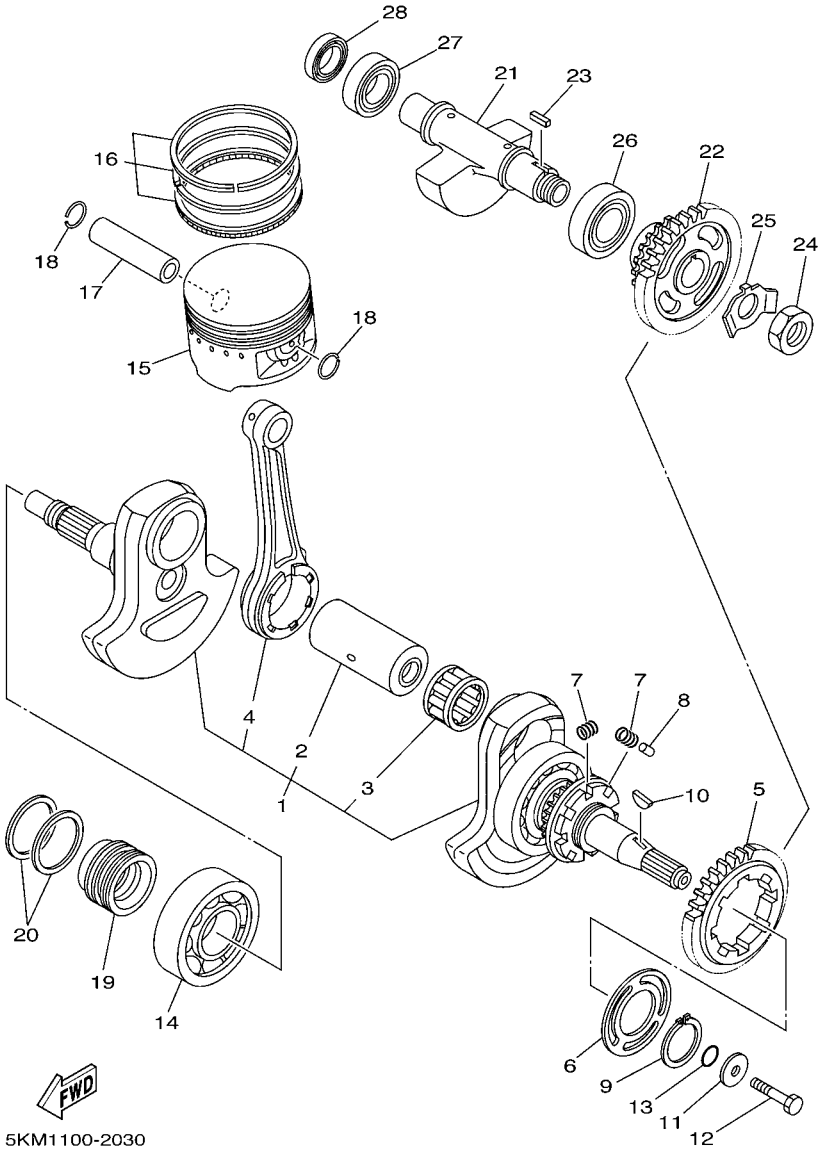

FIG. 3 CRANKSHAFT & PISTON

REF. NO.	PART NO.	DESCRIPTION	USA	CAN	EUR	OCE	JPN	REMARKS
24	90170–18003	NUT	1	1	1	1	1	
25	90215–18001	WASHER, LOCK	1	1	1	1	1	
26	93306–30534	BEARING	1	1	1	1	1	
27	93306–30432	BEARING	1	1	1	1	1	
28	93102–20108	OIL SEAL	1	1	1	1	1	

FIG. 4 VALVE

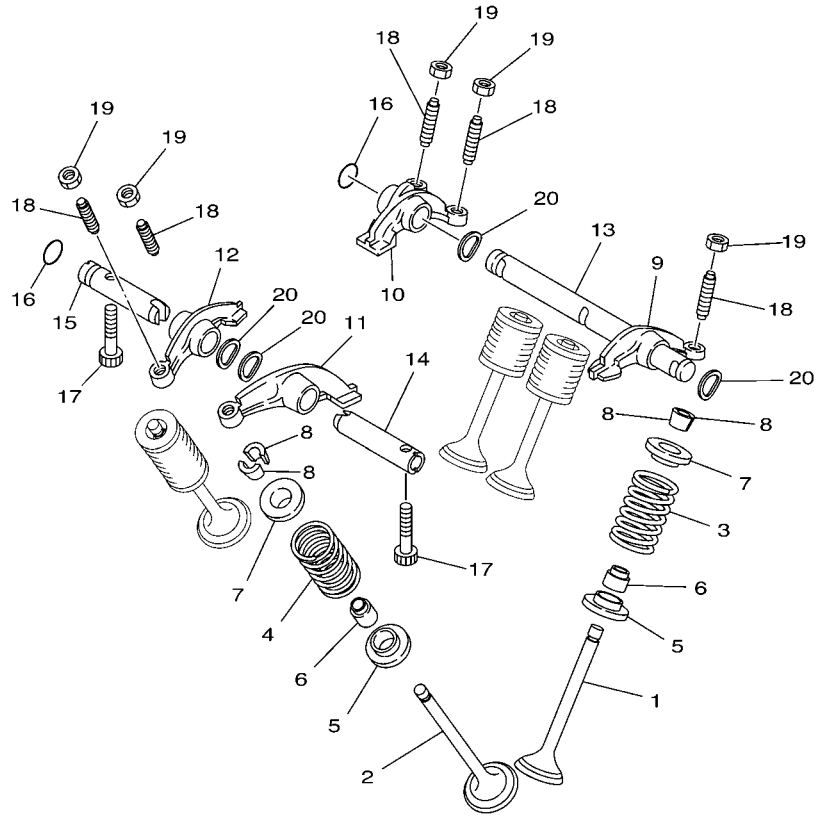

5LP1100-1041

REF. NO.	PART NO.	DESCRIPTION	USA	CAN	EUR	OCE	JPN	REMARKS
1	5KM–12111–00	VALVE, INTAKE	3	3	3	3	3	
2	3YF–12121–00	VALVE, EXHAUST	2	2	2	2	2	
3	3YF–12113–00	SPRING, VALVE INNER	3	3	3	3	3	
4	3YF–12114–00	SPRING, VALVE OUTER	2	2	2	2	2	
5	3YF–12116–00	SEAT, VALVE SPRING	5	5	5	5	5	
6	5H0–12119–00	SEAL, VALVE STEM	5	5	5	5	5	
7	3YF–12117–01	RETAINER, VALVE SPRING	5	5	5	5	5	
8	4G0–12118–00	COTTER, VALVE	10	10	10	10	10	
9	3YF–12151–00	ARM, VALVE ROCKER	1	1	1	1	1	
10	3YF–12161–00	ARM, VALVE ROCKER 2	1	1	1	1	1	
11	3YF–12162–00	ARM, VALVE ROCKER 3	1	1	1	1	1	
12	3YF–12163–00	ARM, VALVE ROCKER 4	1	1	1	1	1	
13	3YF–12146–00	SHAFT, ROCKER	1	1	1	1	1	
14	2NX–12156–00	SHAFT, ROCKER 2	1	1	1	1	1	
15	3YF–12166–00	SHAFT, ROCKER 3	1	1	1	1	1	
16	93210–08521	O-RING	2	2	2	2	2	
17	90109–063E8	BOLT	2	2	2	2	2	
18	2NX–12159–00	SCREW, VALVE ADJUSTING	5	5	5	5	5	
19	90170–06128	NUT	5	5	5	5	5	
20	90206–12075	WASHER, WAVE	4	4	4	4	4	

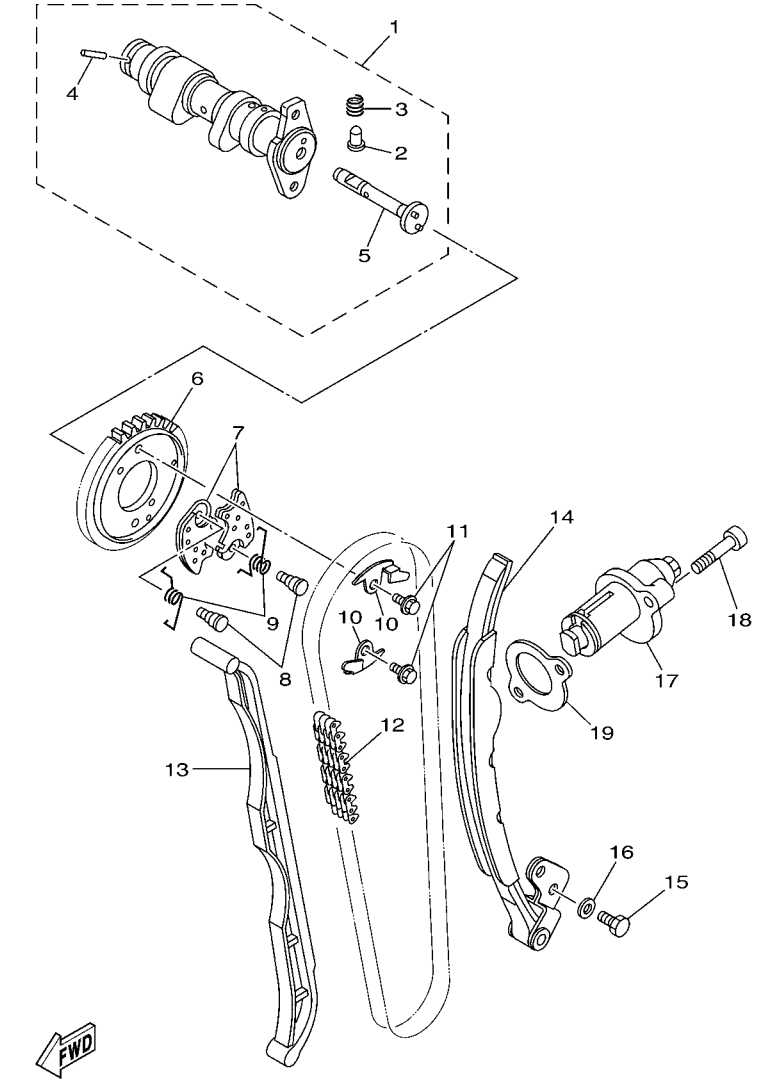

5KMT171-C050

FIG. 5 CAMSHAFT & CHAIN

REF. NO.	PART NO.	DESCRIPTION	USA	CAN	EUR	OCE	JPN	REMARKS
1	5KM–12170–00	CAMSHAFT ASSY 1	1	1	1	1	1	
2	3YF–12284–00	.PIN, DECOMPRESSION LEVER	1	1	1	1	1	
3	90501–05001	.SPRING, COMPRESSION	1	1	1	1	1	
4	93603–21180	.PIN, DOWEL	1	1	1	1	1	
5	3YF–12290–00	.LEVER, DECOMPRESSION SPRING	1	1	1	1	1	
6	5KM–12176–00	SPROCKET, CAM CHAIN	1	1	1	1	1	
7	3YF–12288–00	CAM, DECOMPRESSION	2	2	2	2	2	
8	3YF–12247–00	SHAFT, TENSIONER	2	2	2	2	2	
9	5KM–12216–00	SPRING	2	2	2	2	2	
10	3YF–12233–01	PLATE, GUIDE STOPPER 1	2	2	2	2	2	
11	90105–07004	BOLT, FLANGE	2	2	2	2	2	
12	94591–53126	CHAIN (92RH2010-126M)	1	1	1	1	1	
13	5KM–12231–10	GUIDE, STOPPER 1	1	1	1	1	1	
14	5KM–12241–00	GUIDE, STOPPER 2	1	1	1	1	1	
15	97027–06016	BOLT	2	2	2	2	2	
16	92907–06600	WASHER, PLATE	2	2	2	2	2	
17	5KM–12210–00	TENSIONER ASSY, CAM CHAIN	1	1	1	1	1	
18	90110–06039	BOLT, HEXAGON SOCKET HEAD	2	2	2	2	2	
19	4DW–12213–00	GASKET, TENSIONER CASE	1	1	1	1	1	

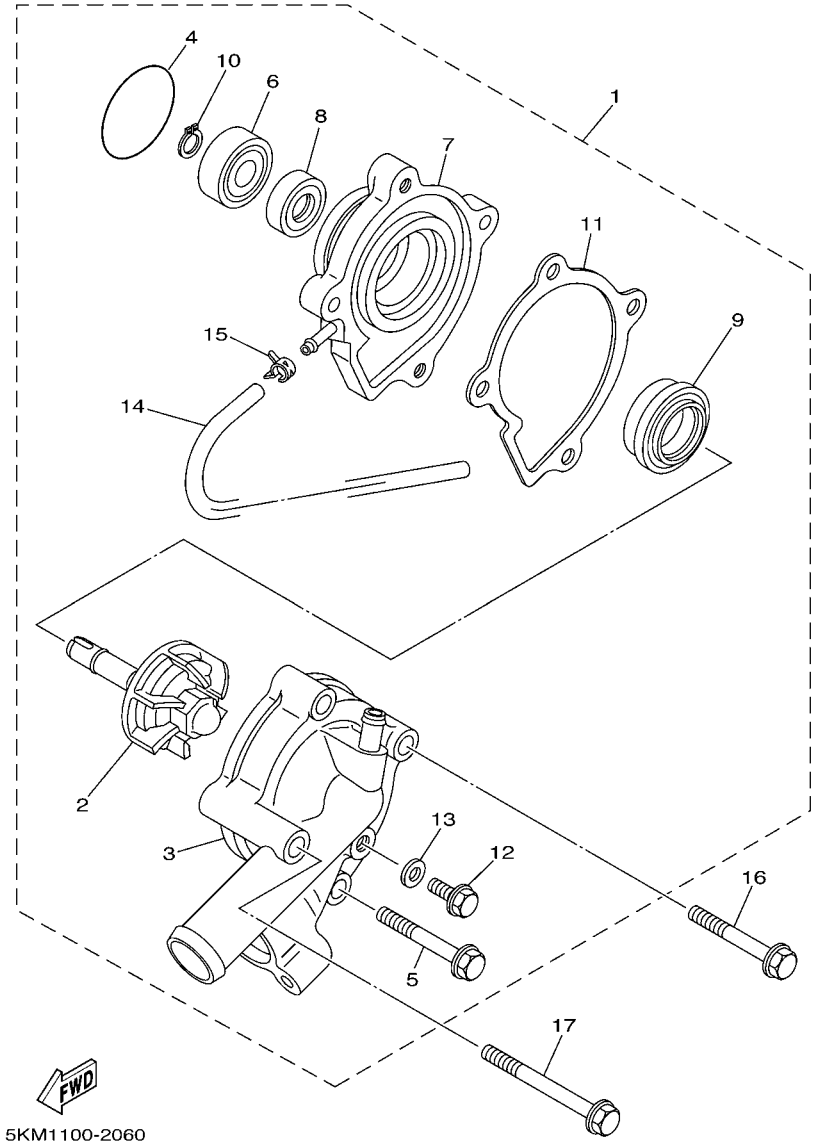

FIG. 6 WATER PUMP

REF. NO.	PART NO.	DESCRIPTION	USA	CAN	EUR	OCE	JPN	REMARKS
1	5KM–12420–10	WATER PUMP ASSY	1	1	1	1	1	
2	5KM–12450–10	.IMPELLER SHAFT ASSY	1	1	1	1	1	
3	5KM–12422–00	.COVER, HOUSING	1	1	1	1	1	
4	93210–33133	.O-RING	1	1	1	1	1	
5	90105–06023	.BOLT, FLANGE	2	2	2	2	2	
6	93306–00006	.BEARING	1	1	1	1	1	
7	5KM–12421–00	.HOUSING, WATER PUMP	1	1	1	1	1	
8	93101–10090	.OIL SEAL	1	1	1	1	1	
9	11H–12438–10	.SEAL, MECHANICAL	1	1	1	1	1	
10	99009–10400	.CIRCLIP	1	1	1	1	1	
11	5KM–12428–00	.GASKET, HOUSING COVER 2	1	1	1	1	1	
12	95027–06012	.BOLT, FLANGE	1	1	1	1	1	
13	90430–06014	.GASKET	1	1	1	1	1	
14	90446–06001	.HOSE (L300)	1	1	1	1	1	
15	90467–06194	.CLIP	1	1	1	1	1	
16	95027–06045	BOLT, FLANGE	1	1	1	1	1	
17	95027–06065	BOLT, FLANGE	1	1	1	1	1	

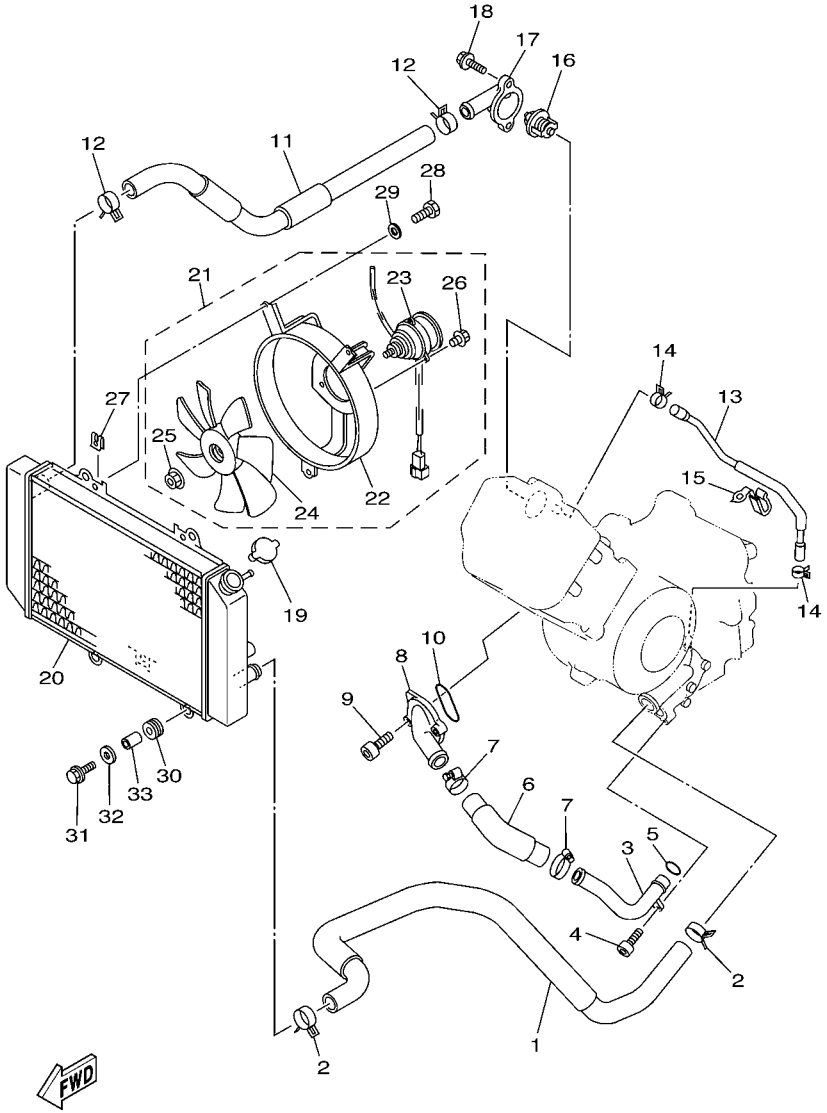

5KM5110-2070

FIG. 7 RADIATOR & HOSE

REF. NO.	PART NO.	DESCRIPTION	USA	CAN	EUR	OCE	JPN	REMARKS
1	5KM–12576–00	HOSE 1	1	1	1	1	1	
2	90467–26189	CLIP	2	2	2	2	2	
3	5KM–12481–00	PIPE 1	1	1	1	1	1	
4	91317–06010	BOLT	1	1	1	1	1	
5	93210–21190	O-RING	1	1	1	1	1	
6	5KM–12577–00	HOSE 2	1	1	1	1	1	
7	90450–32015	HOSE CLAMP ASSY	2	2	2	2	2	
8	5KM–12469–00	JOINT 1	1	1	1	1	1	
9	91317–06020	BOLT	2	2	2	2	2	
10	93210–33786	O-RING	1	1	1	1	1	
11	5KM–12578–00	HOSE 3	1	1	1	1	1	
12	90467–26189	CLIP	2	2	2	2	2	
13	5KM–12579–00	HOSE 4	1	1	1	1	1	
14	90467–10038	CLIP	2	2	2	2	2	
15	90462–08008	CLAMP	1	1	1	1	1	
16	5KM–12411–01	THERMOSTAT	1	1	1	1	1	
17	5KM–12413–01	COVER, THERMOSTAT	1	1	1	1	1	
18	95027–06020	BOLT, FLANGE	2	2	2	2	2	
19	5HD–12462–00	CAP, RADIATOR	1	1	1	1	1	
20	5KM–12461–00	RADIATOR ASSY	1	1	1	1	1	
21	5KM–12405–00	BLOWER ASSY	1	1	1	1	1	
22	5KM–12620–00	.AIR SHROUD ASSY	1	1	1	1	1	
23	5KM–12630–00	.MOTOR ASSY	1	1	1	1	1	
24	5KM–12611–00	.FAN	1	1	1	1	1	
25	33M–12671–00	.NUT 1	1	1	1	1	1	
26	5GH–12647–00	.SCREW, MOTOR HOLDING	3	3	3	3	3	
27	1AA–12535–00	PLATE	3	3	3	3	3	

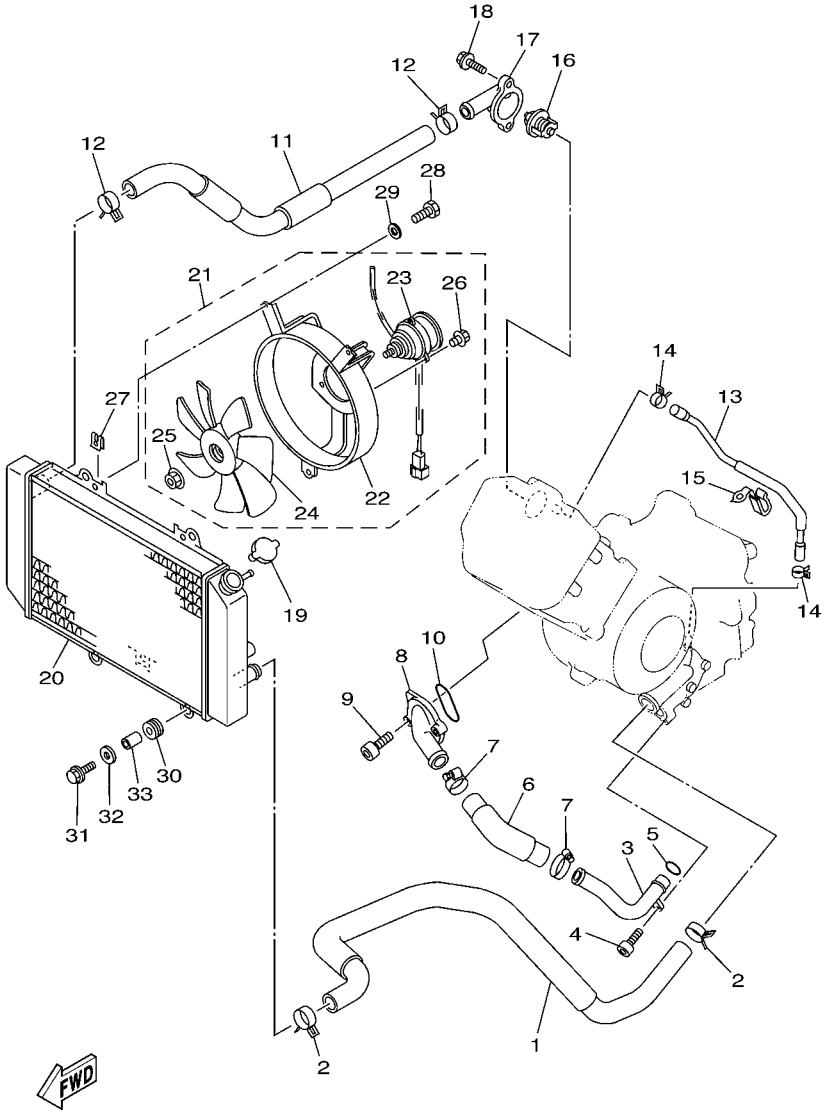

5KM5110-2070

FIG. 7 RADIATOR & HOSE

REF. NO.	PART NO.	DESCRIPTION	USA	CAN	EUR	OCE	JPN	REMARKS
28	97017–06010	BOLT	3	3	3	3	3	
29	92907–06600	WASHER, PLATE	3	3	3	3	3	
30	90480–15235	GROMMET	4	4	4	4	4	
31	95807–06020	BOLT, FLANGE	2	2	2	2	2	
32	90209–06174	WASHER	2	2	2	2	2	
33	90387–060A7	COLLAR	2	2	2	2	2	

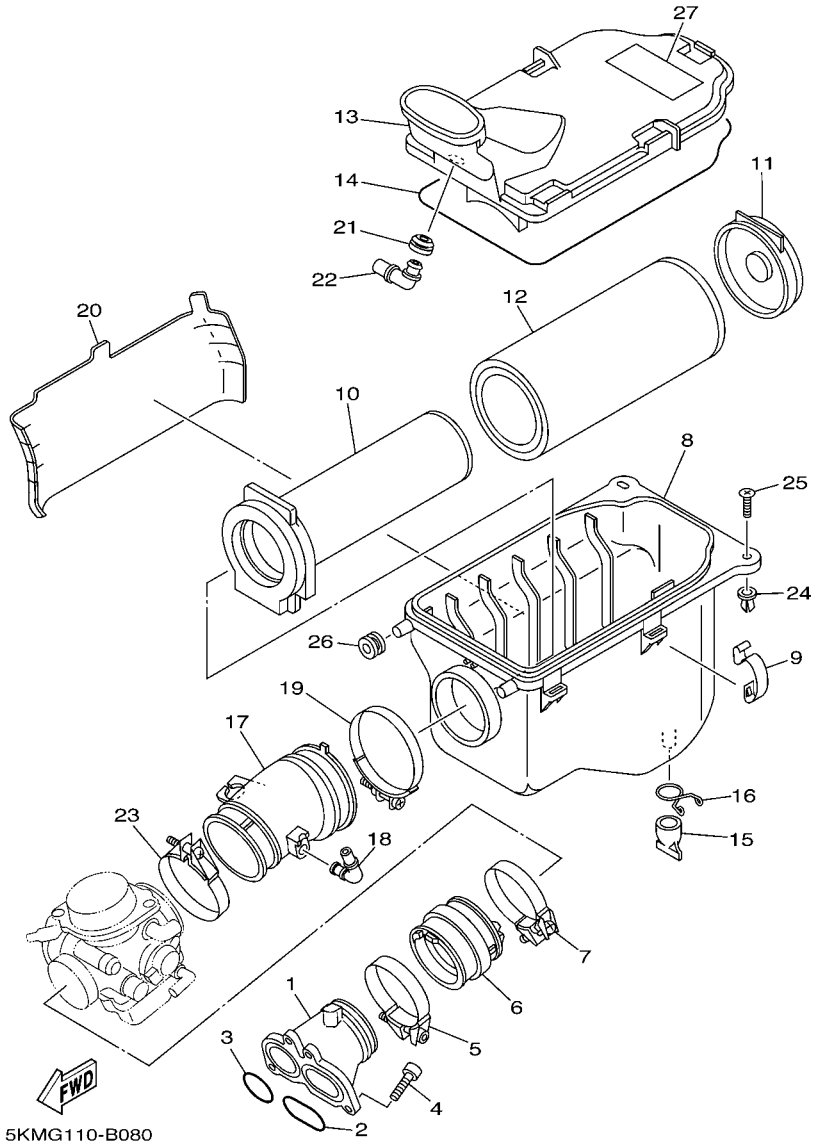

FIG. 8 INTAKE

REF. NO.	PART NO.	DESCRIPTION	USA	CAN	EUR	OCE	JPN	REMARKS
1	5KM–13586–01	JOINT, CARBURETOR 1	1	1	1	1	1	
2	93210–44545	O-RING	1	1	1	1	1	
3	93210–321A8	O-RING	1	1	1	1	1	
4	91317–06020	BOLT	4	4	4	4	4	
5	90450–65001	HOSE CLAMP ASSY	1	1	1	1	1	
6	5KM–13596–00	JOINT, CARBURETOR 2	1	1	1	1	1	
7	90460–59211	CLAMP, HOSE	1	1	1	1	1	
8	5KM–14411–10	CASE, AIR CLEANER 1	1	1	1	1	1	
9	5GH–14436–00	HOOK	5	5	5	5	5	
10	1UY–14458–01	GUIDE	1	1	1	1	1	
11	1UY–14468–00	PLATE,ELEMENT FITTING	1	1	1	1	1	
12	1UY–14451–00	ELEMENT, AIR CLEANER	1	1	1	1	1	
13	5KM–14412–10	CAP, CLEANER CASE 1	1	1	1	1	1	
14	5KM–14452–00	SEAL	1	1	1	1	1	
15	59V–14457–00	SEAL	1	1	1	1	1	
16	90467–22080	CLIP	1	1	1	1	1	
17	5KM–14453–00	JOINT, AIR CLEANER 1	1	1	1	1	1	
18	31A–14419–00	PIPE	1	1	1	1	1	
19	90460–75020	CLAMP, HOSE	1	1	1	1	1	
20	5KM–1442F–01	PROTECTOR	1	1	1	1	1	
21	31A–14435–00	GROMMET	1	1	1	1	1	
22	5KM–14419–00	PIPE	1	1	1	1	1	
23	90450–67001	HOSE CLAMP ASSY	1	1	1	1	1	
24	90338–08226	PLUG	2	2	2	2	2	
25	97707–60025	SCREW, TAPPING	2	2	2	2	2	
26	90480–18290	GROMMET	2	2	2	2	2	
27	2C6–2177C–00	PLATE, EPA OFFROAD ATV 1	1					

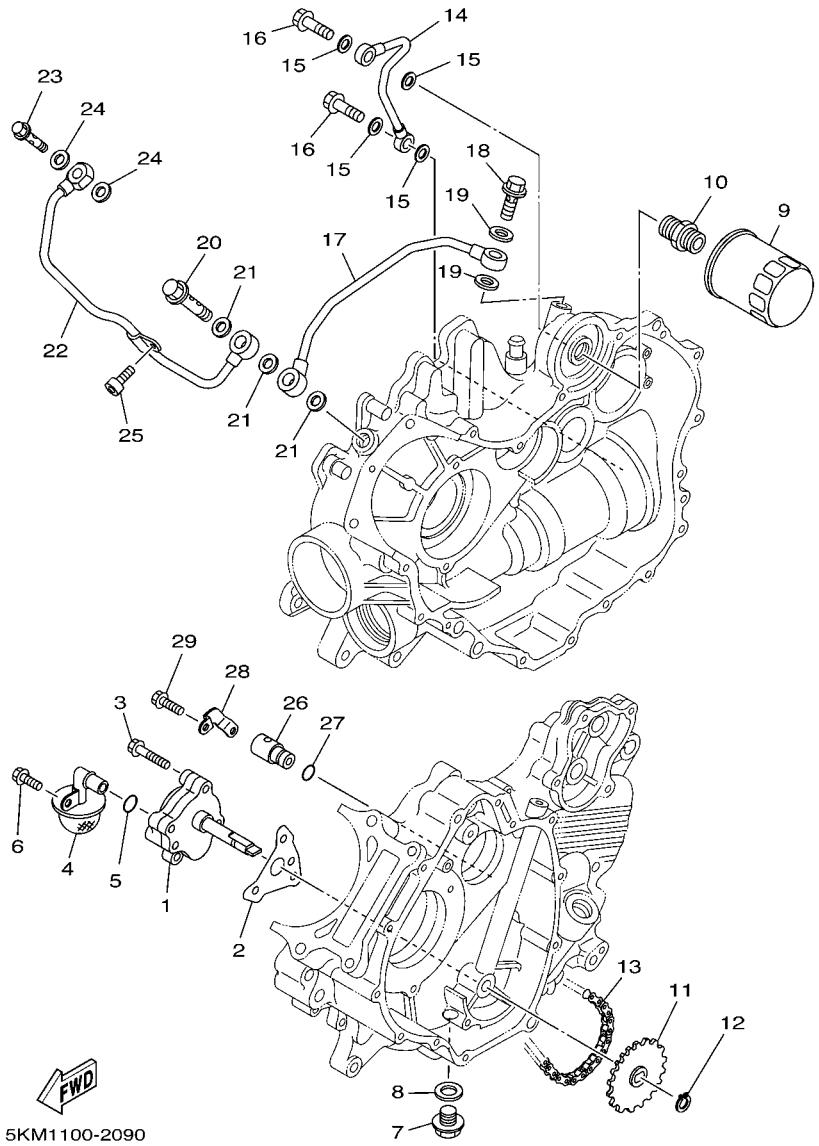

FIG. 9 OIL PUMP

REF. NO.	PART NO.	DESCRIPTION	USA	CAN	EUR	OCE	JPN	REMARKS
1	5KM–13300–00	OIL PUMP ASSY	1	1	1	1	1	
2	5KM–13329–00	GASKET, PUMP COVER	1	1	1	1	1	
3	95027–06040	BOLT, FLANGE	3	3	3	3	3	
4	5KM–13410–00	STRAINER HOUSING ASSY	1	1	1	1	1	
5	93210–14579	O-RING	1	1	1	1	1	
6	95027–06014	BOLT, FLANGE	1	1	1	1	1	
7	90340–14132	PLUG, STRAIGHT SCREW	1	1	1	1	1	
8	214–11198–01	GASKET	1	1	1	1	1	
9	5GH–13440–00	ELEMENT ASSY, OIL CLEANER	1	1	1	1	1	
10	90401–20145	BOLT, UNION	1	1	1	1	1	
11	5KM–13355–00	SPROCKET, DRIVEN	1	1	1	1	1	
12	99009–11400	CIRCLIP	1	1	1	1	1	
13	94581–94070	CHAIN (DID25SD DHA)	1	1	1	1	1	
14	3AJ–13161–01	PIPE, DELIVERY 1	1	1	1	1	1	
15	90430–08204	GASKET	4	4	4	4	4	
16	90401–08004	BOLT, UNION	2	2	2	2	2	
17	5KM–13171–00	PIPE, DELIVERY 2	1	1	1	1	1	
18	90401–14118	BOLT, UNION	1	1	1	1	1	
19	90430–14043	GASKET	2	2	2	2	2	
20	5KM–12858–00	BOLT, UNION	1	1	1	1	1	
21	90430–14043	GASKET	3	3	3	3	3	
22	5KM–13181–00	PIPE, DELIVERY 3	1	1	1	1	1	
23	90401–10159	BOLT, UNION	1	1	1	1	1	
24	90430–10188	GASKET	2	2	2	2	2	
25	91317–06012	BOLT	1	1	1	1	1	
26	5KM–13490–00	RELIEF VALVE ASSY	1	1	1	1	1	
27	93210–10096	O-RING	1	1	1	1	1	

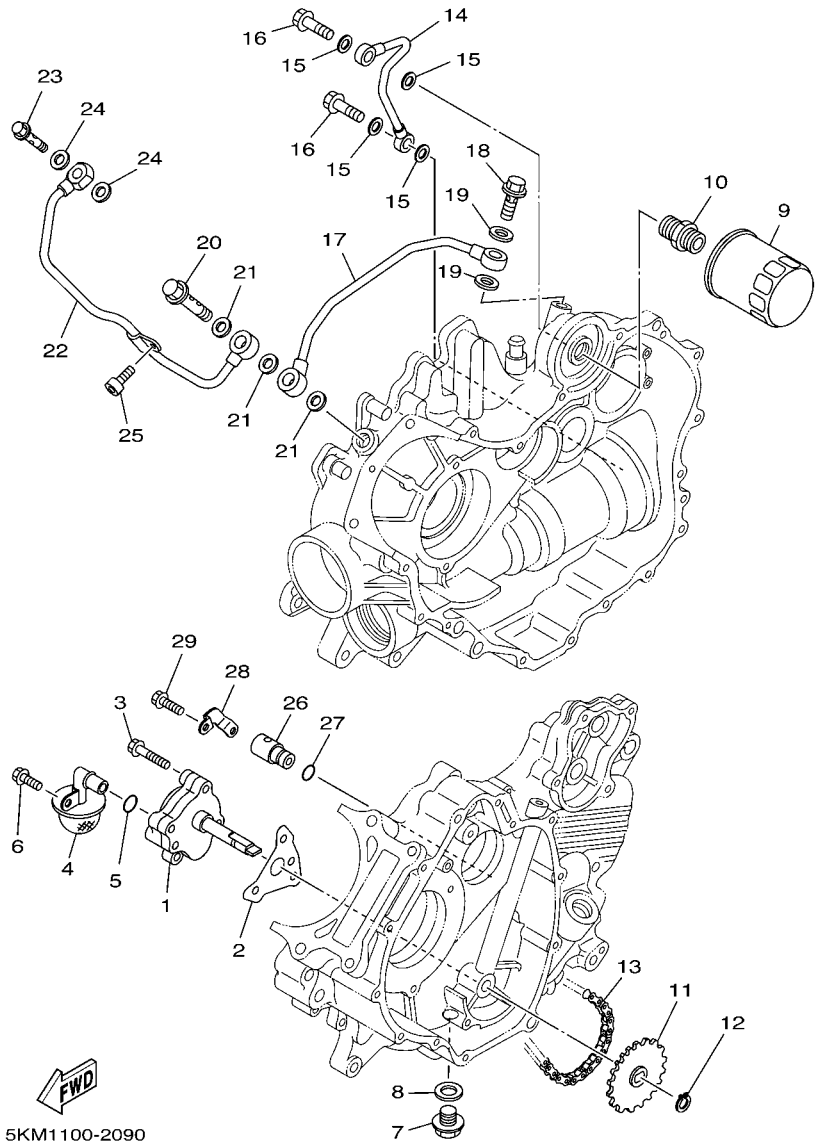

FIG. 9 OIL PUMP

REF. NO.	PART NO.	DESCRIPTION	USA	CAN	EUR	OCE	JPN	REMARKS
28	5KM–1319K–00	PLATE	1	1	1	1	1	
29	95027–06012	BOLT, FLANGE	2	2	2	2	2	

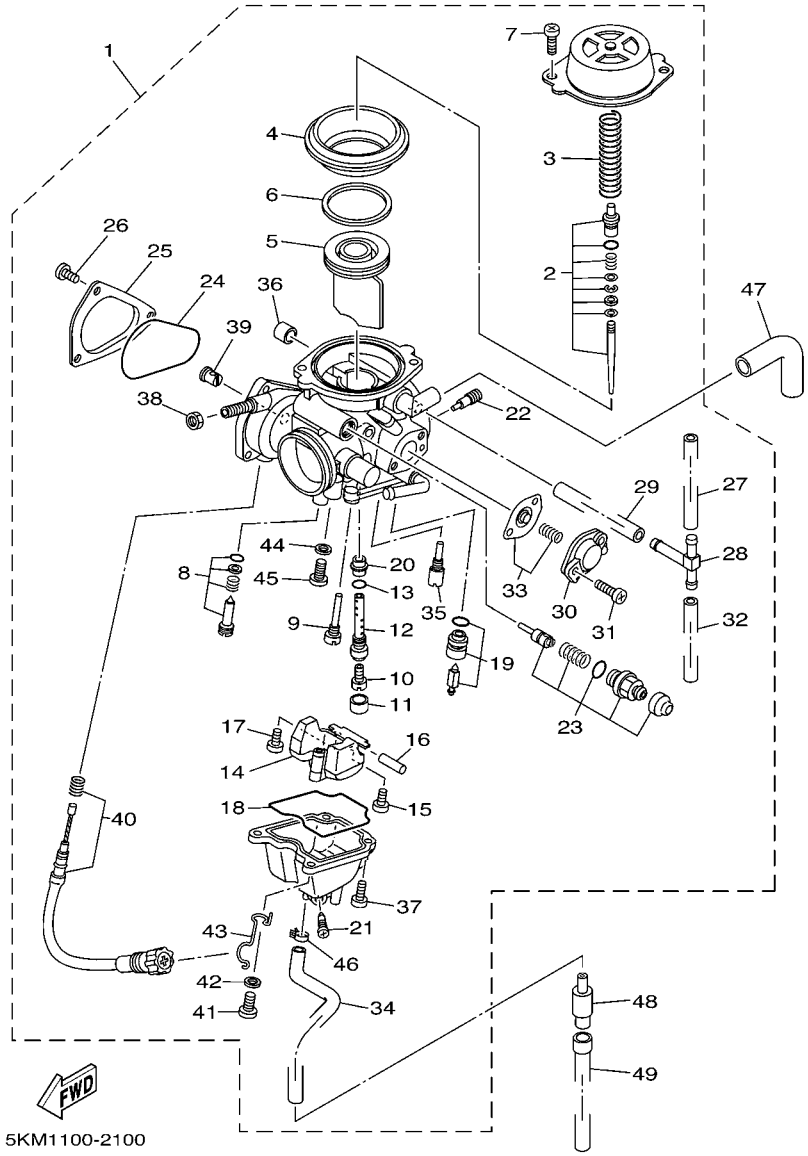

FIG. 10 CARBURETOR

REF. NO.	PART NO.	DESCRIPTION	USA	CAN	EUR	OCE	JPN	REMARKS
1	2C6–14901–00	CARBURETOR ASSY 1	1					
	5KM–14901–10	CARBURETOR ASSY 1		1	1	1	1	
2	5UG–1490J–00	.NEEDLE SET	1					
	5KM–1490J–00	.NEEDLE SET		1	1	1	1	
3	4KM–14933–00	.SPRING, DIAPHRAGM	1	1	1	1	1	
4	5KM–24411–00	.DIAPHRAGM	1	1	1	1	1	
5	5KM–14912–00	.VALVE, THROTTLE	1	1	1	1	1	
6	5KM–14918–00	.RING	1	1	1	1	1	
7	98507–05008	.SCREW, PAN HEAD	2	2	2	2	2	
8	5EA–14105–00	.PILOT SCREW SET	1	1	1	1	1	
9	3G2–14231–11	.JET, POWER (# 55)	1	1	1	1	1	
10	3G2–1423E–61	.JET, MAIN (#153.8)	1	1	1	1	1	
11	5GH–14918–00	.RING	1	1	1	1	1	
12	5GH–14261–00	.HOLDER	1	1	1	1	1	
13	583–14561–00	.O-RING	1	1	1	1	1	
14	5DM–14985–00	.FLOAT	1	1	1	1	1	
15	98507–04008	.SCREW, PAN HEAD	1	1	1	1	1	
16	127–14186–00	.PIN, FLOAT	1	1	1	1	1	
17	1FN–14565–00	.SCREW	1	1	1	1	1	
18	5DM–14561–00	.O-RING	1	1	1	1	1	
19	5KM–14190–30	.NEEDLE VALVE ASSY	1	1	1	1	1	
20	5DM–14141–30	.NOZZLE, MAIN	1	1	1	1	1	
21	12R–14191–00	.PLUG, DRAIN	1	1	1	1	1	
22	1HX–14231–12	.JET, MAIN (# 60)	1	1	1	1	1	
23	5KM–1410A–00	.STARTER SET	1	1	1	1	1	
24	4WV–14147–10	.O-RING	1	1	1	1	1	
25	4WV–14293–00	.COVER 1	1	1	1	1	1	

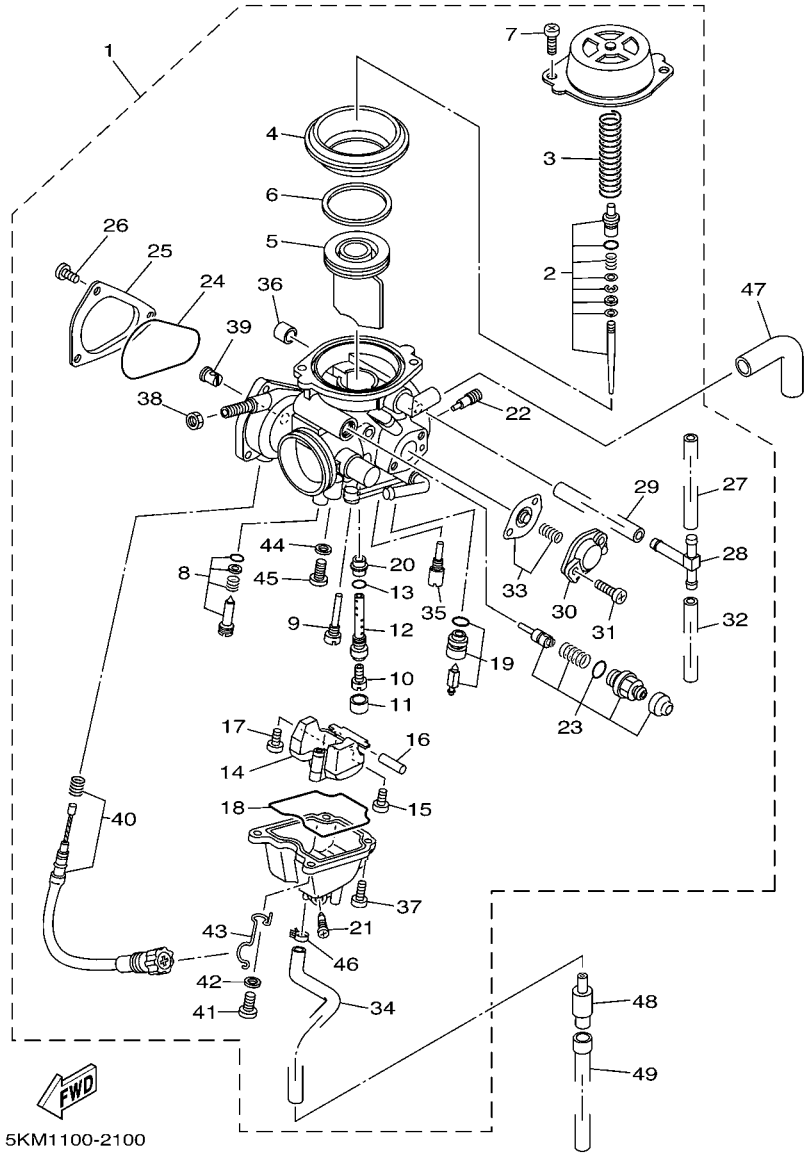

FIG. 10 CARBURETOR

REF. NO.	PART NO.	DESCRIPTION	USA	CAN	EUR	OCE	JPN	REMARKS
26	98507–04008	.SCREW, PAN HEAD	3	3	3	3	3	
27	5KM–14197–20	.PIPE	1	1	1	1	1	
28	28V–14988–00	.PIPE, STARTER CONNECTING	1	1	1	1	1	
29	3YX–14197–00	.PIPE	1	1	1	1	1	
30	5AP–14280–00	.COVER, CARBURETOR	1	1	1	1	1	
31	97607–04114	.SCREW,WITH WASHER	2	2	2	2	2	
32	5KM–14197–10	.PIPE	1	1	1	1	1	
33	5KM–1490H–00	.DIAPHRAGM SET 5	1	1	1	1	1	
34	5KM–14193–00	.PIPE	1	1	1	1	1	
35	4KM–14142–40	.JET, PILOT (# 40)	1	1	1	1	1	
36	5KM–14968–00	.CAP	1	1	1	1	1	
37	98507–04010	.SCREW, PAN HEAD	3	3	3	3	3	
38	522–14161–00	.NUT, CABLE ADJUSTING	1	1	1	1	1	
39	1UY–14155–00	.GUIDE, CABLE	1	1	1	1	1	
40	5KM–14103–00	.THROTTLE SCREW SET	1	1	1	1	1	
41	98507–04014	.SCREW, PAN HEAD	1	1	1	1	1	
42	92907–04600	.WASHER	1	1	1	1	1	
43	5KM–14937–00	.CLIP	1	1	1	1	1	
44	256–14956–01	.WASHER	1	1	1	1	1	
45	3DM–14216–00	.SCREW	1	1	1	1	1	
46	90467–06194	.CLIP	1	1	1	1	1	
47	4WV–14349–00	PIPE	1	1	1	1	1	
48	24W–14193–00	PIPE	1	1	1	1	1	
49	91A20–07010	TUBE, FLEXIBLE VINYL	1	1	1	1	1	

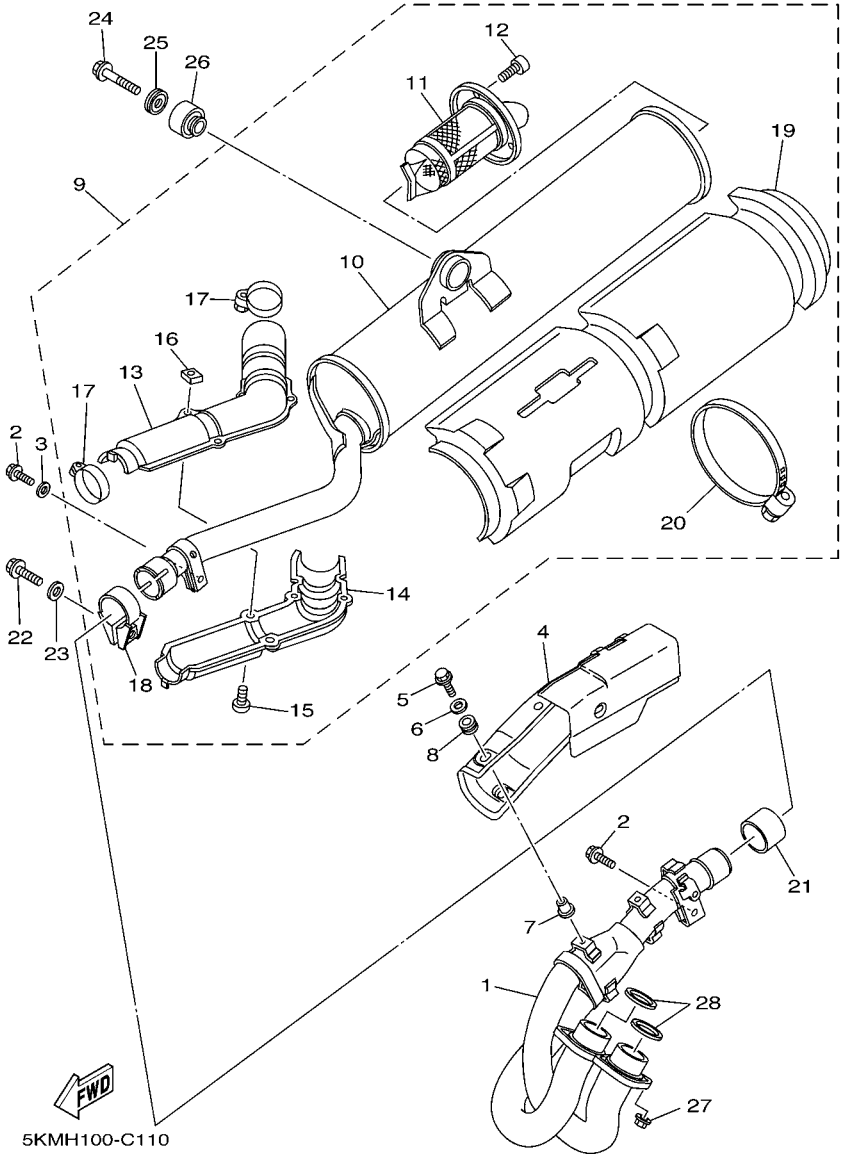

FIG. 11 EXHAUST

REF. NO.	PART NO.	DESCRIPTION	USA	CAN	EUR	OCE	JPN	REMARKS
1	5KM–14611–10	PIPE, EXHAUST 1	1	1	1	1	1	
2	95817–06020	BOLT, FLANGE	2	2	2	2	2	
3	90201–06778	WASHER, PLATE	1	1	1	1	1	
4	5KM–14627–00	COVER, EXHAUST	1	1	1	1	1	
5	95827–06016	BOLT, FLANGE	6	6	6	6	6	
6	90201–06778	WASHER, PLATE	6	6	6	6	6	
7	90387–061V4	COLLAR	6	6	6	6	6	
8	90480–01009	GROMMET	6	6	6	6	6	
9	5KM–14711–10	MUFFLER 1	1	1	1	1	1	
10	5KM–14721–00	.MUFFLER 1	1	1	1	1	1	
11	5KM–14752–00	.PIPE, OUTLET	1	1	1	1	1	
12	91380–06010	.BOLT	3	3	3	3	3	
13	5KM–14718–10	.PROTECTOR, MUFFLER 1	1	1	1	1	1	
14	5KM–14728–10	.PROTECTOR, MUFFLER 2	1	1	1	1	1	
15	98507–06010	.SCREW, PAN HEAD	4	4	4	4	4	
16	90173–06015	.NUT, SQUARE	4	4	4	4	4	
17	90450–32008	.HOSE CLAMP ASSY	2	2	2	2	2	
18	5KM–14715–00	.BAND, MUFFLER	1	1	1	1	1	
19	5KM–14738–00	.PROTECTER, MUFFLER 3	1	1	1	1	1	
20	5KM–14788–00	.BAND, SILENCER	3	3	3	3	3	
21	3YF–14755–00	GASKET, SILENCER	1	1	1	1	1	
22	95817–08025	BOLT, FLANGE	1	1	1	1	1	
23	90201–086J0	WASHER, PLATE	1	1	1	1	1	
24	95807–08040	BOLT, FLANGE	1	1	1	1	1	
25	90209–08249	WASHER	1	1	1	1	1	
26	5KM–27414–01	DAMPER	1	1	1	1	1	
27	90179–08410	NUT	4	4	4	4	4	

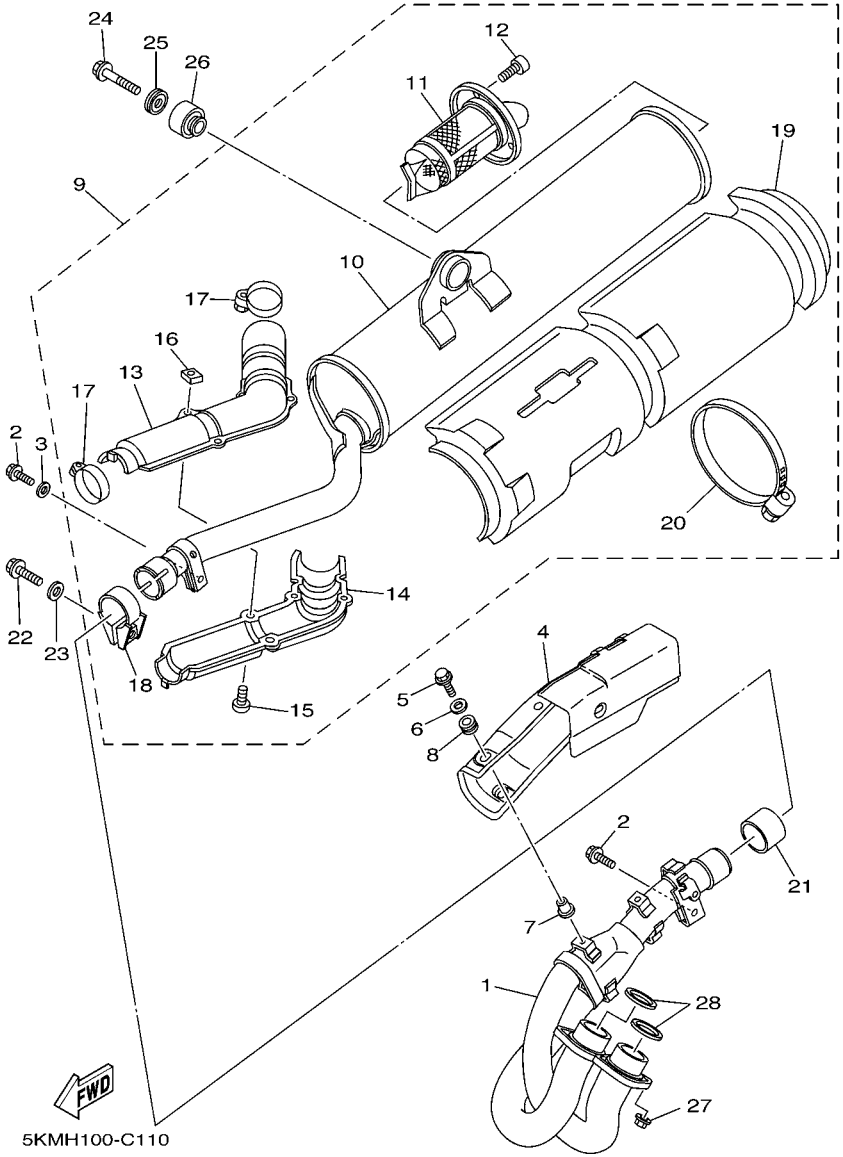

FIG. 11 EXHAUST

REF. NO.	PART NO.	DESCRIPTION	USA	CAN	EUR	OCE	JPN	REMARKS
28	3YF–14613–01	GASKET, EXHAUST PIPE	2	2	2	2	2	

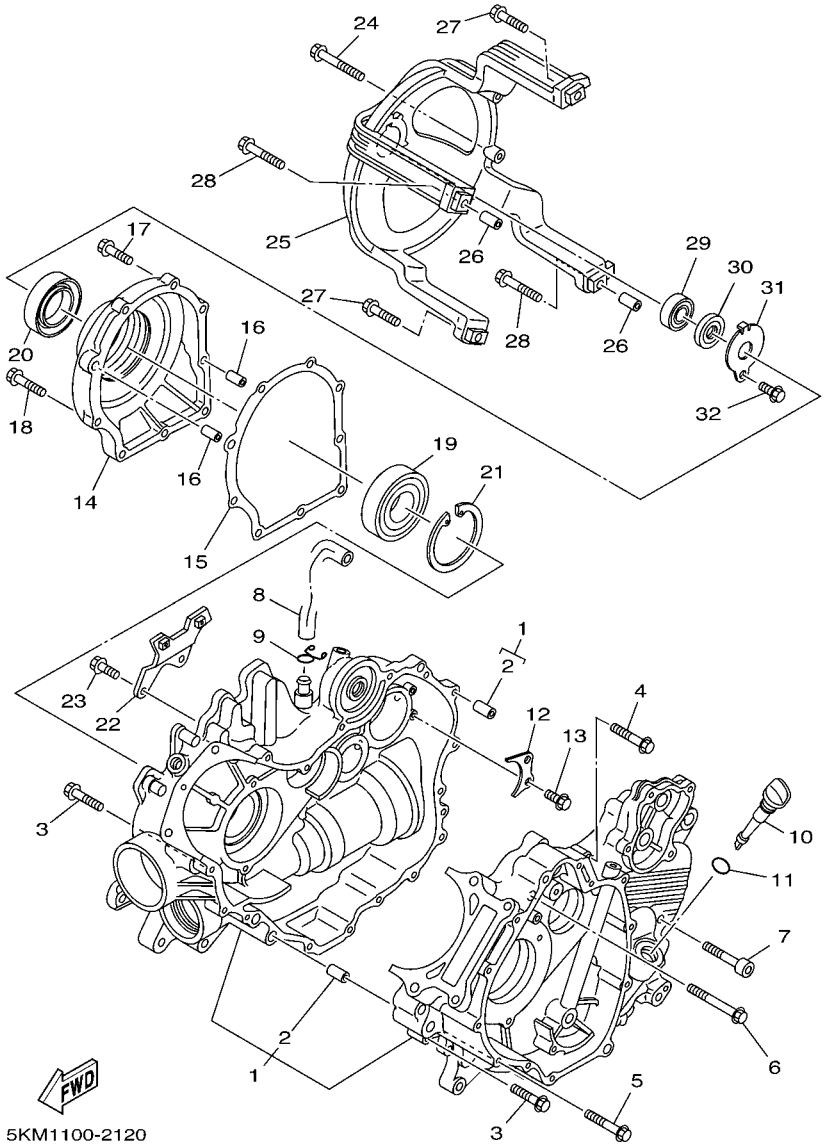

FIG. 12 CRANKCASE

REF. NO.	PART NO.	DESCRIPTION	USA	CAN	EUR	OCE	JPN	REMARKS
1	5KM–15100–11	CRANKCASE ASSY	1	1	1	1	1	
2	99530–10116	.PIN, DOWEL	2	2	2	2	2	
3	95027–06030	BOLT, FLANGE	11	11	11	11	11	
4	90105–06031	BOLT, FLANGE	1	1	1	1	1	
5	95027–06040	BOLT, FLANGE	2	2	2	2	2	
6	95027–06055	BOLT, FLANGE	1	1	1	1	1	
7	91317–08040	BOLT	3	3	3	3	3	
8	5KM–11166–10	PIPE, BREATHER 1	1	1	1	1	1	
9	90467–14015	CLIP	1	1	1	1	1	
10	5KM–15362–00	PLUG, OIL LEVEL	1	1	1	1	1	
11	93210–19026	O-RING	1	1	1	1	1	
12	4WV–15388–00	PLATE, BEARING COVER	1	1	1	1	1	
13	95027–06014	BOLT, FLANGE	2	2	2	2	2	
14	5KM–15163–00	HOUSING, BEARING 1	1	1	1	1	1	
15	5KM–15463–00	GASKET, CARBURETOR COVER 2	1	1	1	1	1	
16	99530–10116	PIN, DOWEL	2	2	2	2	2	
17	95027–06030	BOLT, FLANGE	7	7	7	7	7	
18	95027–06040	BOLT, FLANGE	2	2	2	2	2	
19	93316–01003	BEARING	1	1	1	1	1	
20	93102–35004	OIL SEAL	1	1	1	1	1	
21	99009–80500	CIRCLIP	1	1	1	1	1	
22	5KM–15199–00	BRACKET	1	1	1	1	1	
23	95817–06016	BOLT, FLANGE	2	2	2	2	2	
24	95827–06050	BOLT, FLANGE	2	2	2	2	2	
25	5KM–15442–00	HOUSING, BEARING	1	1	1	1	1	
26	99530–10116	PIN, DOWEL	2	2	2	2	2	
27	95827–06030	BOLT, FLANGE	2	2	2	2	2	

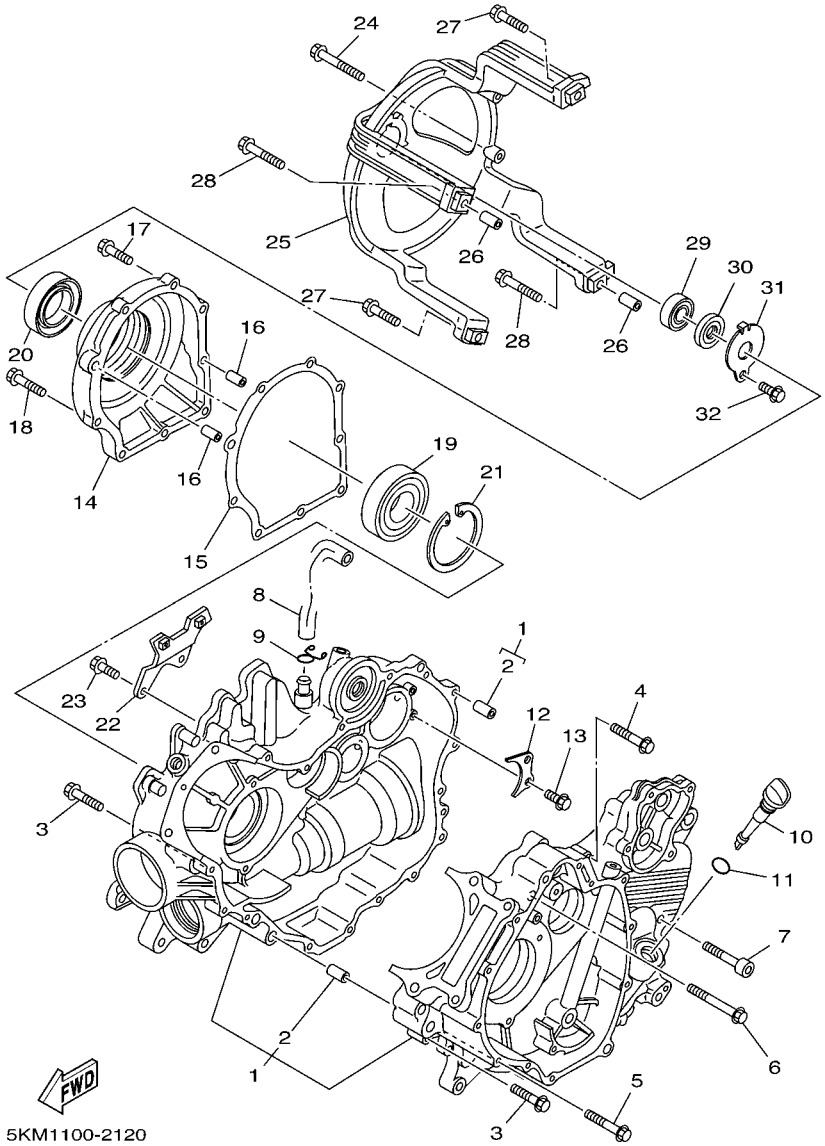

FIG. 12 CRANKCASE

REF. NO.	PART NO.	DESCRIPTION	USA	CAN	EUR	OCE	JPN	REMARKS
28	95827–06040	BOLT, FLANGE	2	2	2	2	2	
29	93306–20120	BEARING	1	1	1	1	1	
30	93101–12168	OIL SEAL	1	1	1	1	1	
31	4WV–15381–00	PLATE, BEARING COVER	1	1	1	1	1	
32	95027–06012	BOLT, FLANGE	1	1	1	1	1	

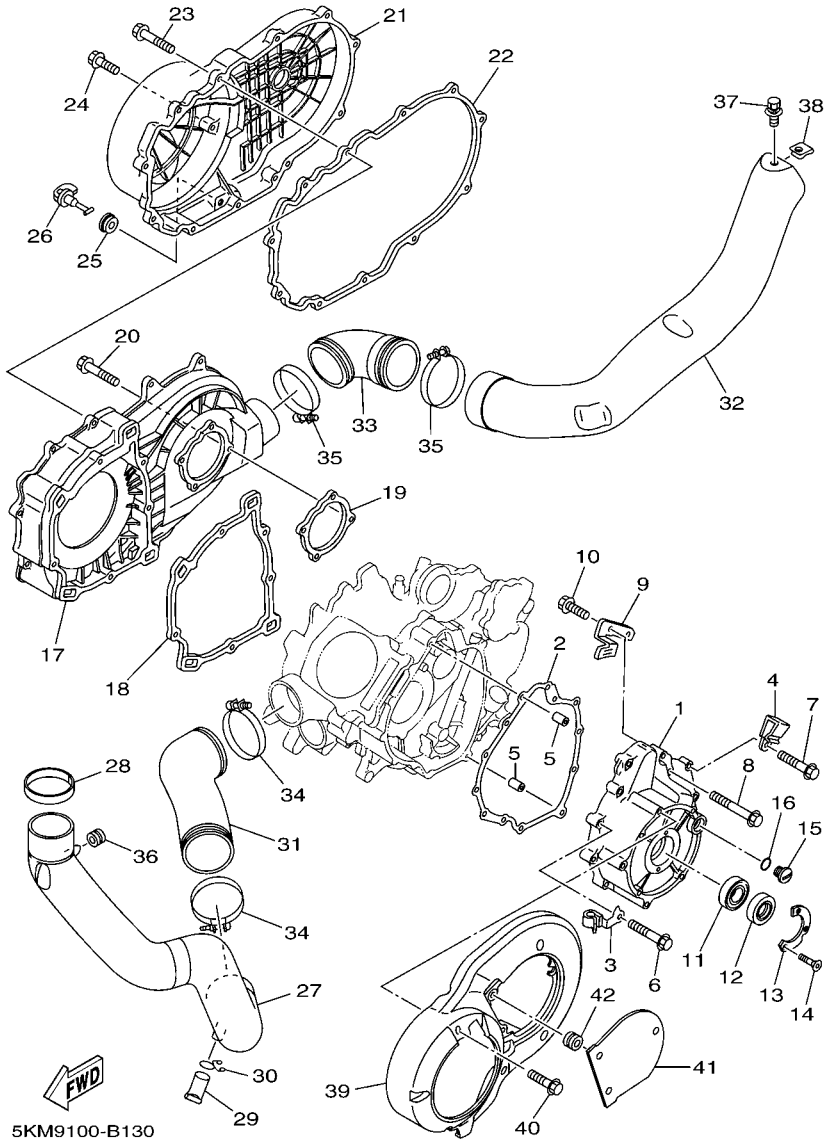

FIG. 13 CRANKCASE COVER 1

REF. NO.	PART NO.	DESCRIPTION	USA	CAN	EUR	OCE	JPN	REMARKS
1	5KM–15411–10	COVER, CRANKCASE 1	1	1	1	1	1	
2	5KM–15451–00	GASKET, CRANKCASE COVER 1	1	1	1	1	1	
3	90465–08361	CLAMP	1	1	1	1	1	
4	90465–05M87	CLAMP	1	1	1	1	1	
5	99530–10116	PIN, DOWEL	2	2	2	2	2	
6	95027–06030	BOLT, FLANGE	8	8	8	8	8	
7	90105–06031	BOLT, FLANGE	1	1	1	1	1	
8	95027–06040	BOLT, FLANGE	4	4	4	4	4	
9	5KM–15113–00	PLATE	1	1	1	1	1	
10	95027–06014	BOLT, FLANGE	2	2	2	2	2	
11	93306–07801	BEARING	1	1	1	1	1	
12	93102–28476	OIL SEAL	1	1	1	1	1	
13	21V–15719–00	WASHER, THRUST	1	1	1	1	1	
14	90151–05023	SCREW, COUNTERSUNK	2	2	2	2	2	
15	90340–14117	PLUG, STRAIGHT SCREW	1	1	1	1	1	
16	93210–14369	O-RING	1	1	1	1	1	
17	5KM–15421–00	COVER, CRANKCASE 2	1	1	1	1	1	
18	5KM–15453–00	GASKET	1	1	1	1	1	
19	5KM–15315–00	SEAL, CRANKCASE	1	1	1	1	1	
20	95827–06030	BOLT, FLANGE	7	7	7	7	7	
21	5KM–15431–00	COVER, CRANKCASE 3	1	1	1	1	1	
22	5KM–15379–00	SEAL, CRANKCASE	1	1	1	1	1	
23	95827–06025	BOLT, FLANGE	12	12	12	12	12	
24	95827–06016	BOLT, FLANGE	2	2	2	2	2	
25	90480–13018	GROMMET	1	1	1	1	1	
26	5KM–15351–00	PLUG, DRAIN	1	1	1	1	1	
27	5KM–15471–00	DUCT, AIR	1	1	1	1	1	

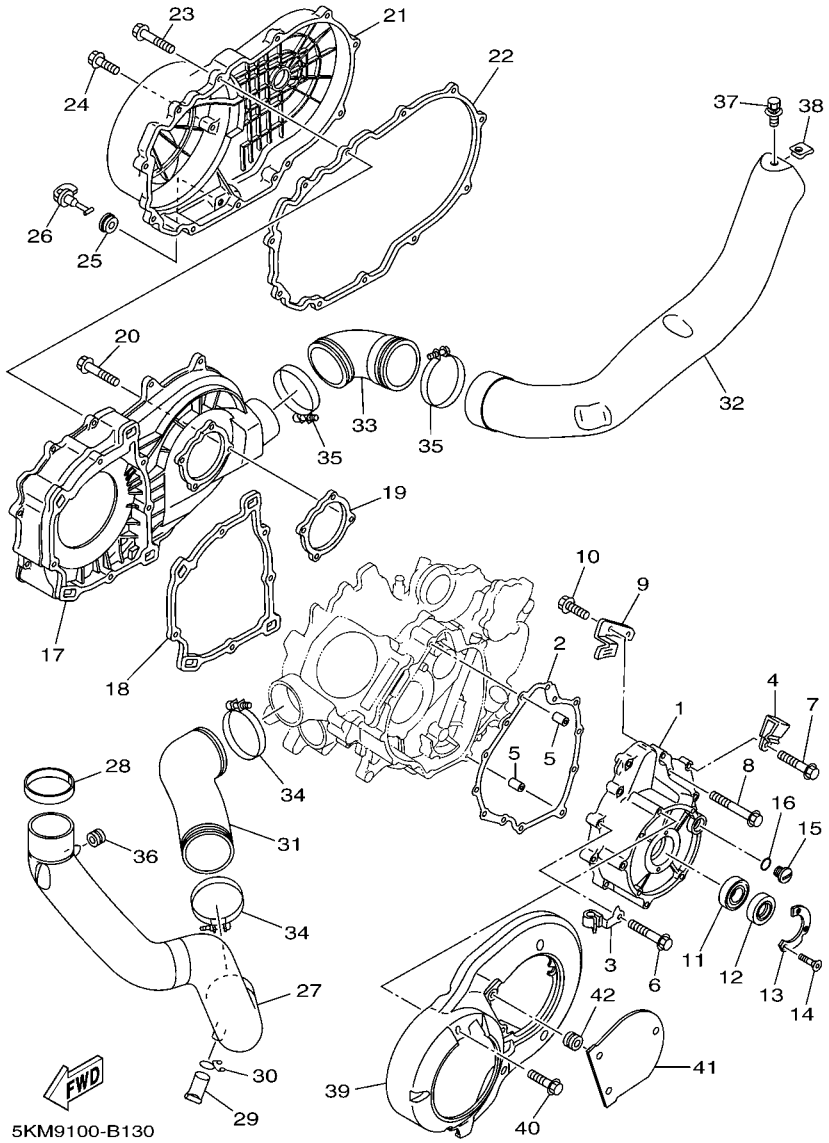

FIG. 13 CRANKCASE COVER 1

REF. NO.	PART NO.	DESCRIPTION	USA	CAN	EUR	OCE	JPN	REMARKS
28	5KM–15494–00	SEAL, PROTECTOR	1	1	1	1	1	
29	5BF–1443E–00	PIPE, DRAIN	1	1	1	1	1	
30	90467–16195	CLIP	1	1	1	1	1	
31	5KM–15472–10	SEAL, AIR DUCT	1	1	1	1	1	
32	5KM–15473–00	DUCT, AIR	1	1	1	1	1	
33	5KM–15474–00	SEAL, AIR DUCT	1	1	1	1	1	
34	90460–81224	CLAMP, HOSE	2	2	2	2	2	
35	90460–85135	CLAMP, HOSE	2	2	2	2	2	
36	90480–13398	GROMMET	1	1	1	1	1	
37	90119–06056	BOLT, WITH WASHER	1	1	1	1	1	
38	90183–06053	NUT, SPRING	1	1	1	1	1	
39	5KM–15423–00	COVER 2	1	1	1	1	1	
40	95827–06020	BOLT, FLANGE	6	6	6	6	6	
41	5GH–15413–00	COVER	1	1	1	1	1	
42	90480–13398	GROMMET	3	3	3	3	3	

FIG. 14 STARTER

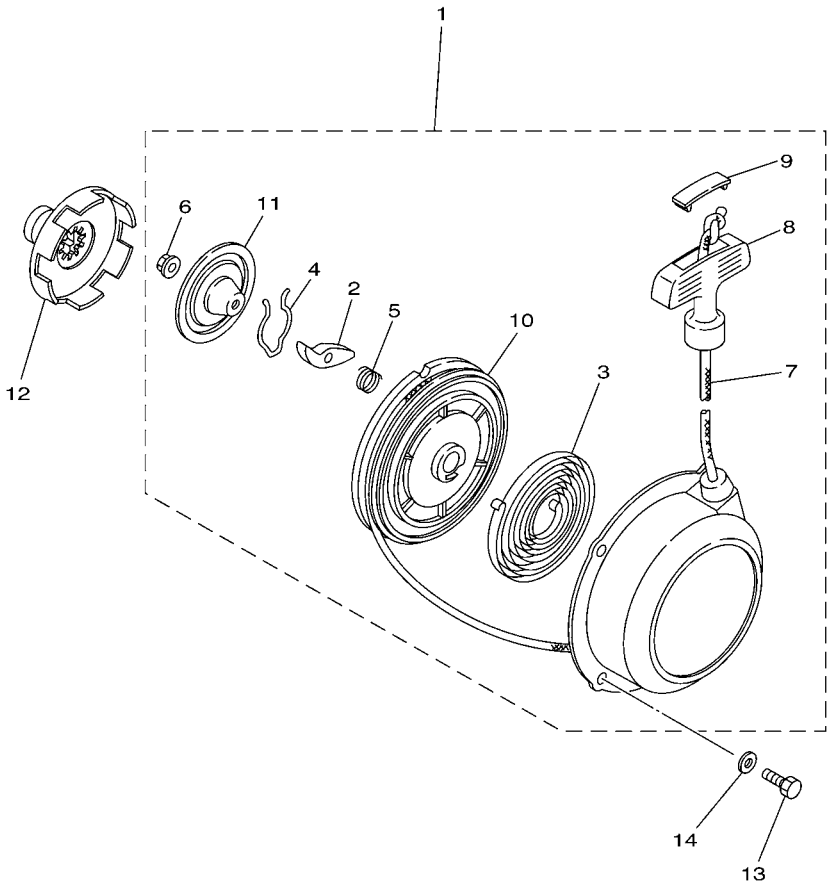

5KMH100-C140

REF. NO.	PART NO.	DESCRIPTION	USA	CAN	EUR	OCE	JPN	REMARKS
1	5UH–15710–00	STARTER ASSY	1	1	1	1	1	
2	21V–15741–00	.PAWL, DRIVE	1	1	1	1	1	
3	5UH–15713–00	.SPRING, STARTER	1	1	1	1	1	
4	21V–15715–01	.SPRING, FRICTION	1	1	1	1	1	
5	21V–15767–00	.SPRING	1	1	1	1	1	
6	95702–06500	.NUT, FLANGE	1	1	1	1	1	
7	21V–15751–00	.WIRE, STARTER	1	1	1	1	1	
8	3X3–15755–00	.HANDLE, STARTER	1	1	1	1	1	
9	21V–15779–00	.COVER	1	1	1	1	1	
10	24W–15714–00	.DRUM, SHEAVE	1	1	1	1	1	
11	5UH–15716–00	.PLATE, DRIVE	1	1	1	1	1	
12	5KM–15723–00	PULLEY, STARTER	1	1	1	1	1	
13	97017–06014	BOLT	4	4	4	4	4	
14	92907–06600	WASHER, PLATE	4	4	4	4	4	

FIG. 15 STARTER CLUTCH

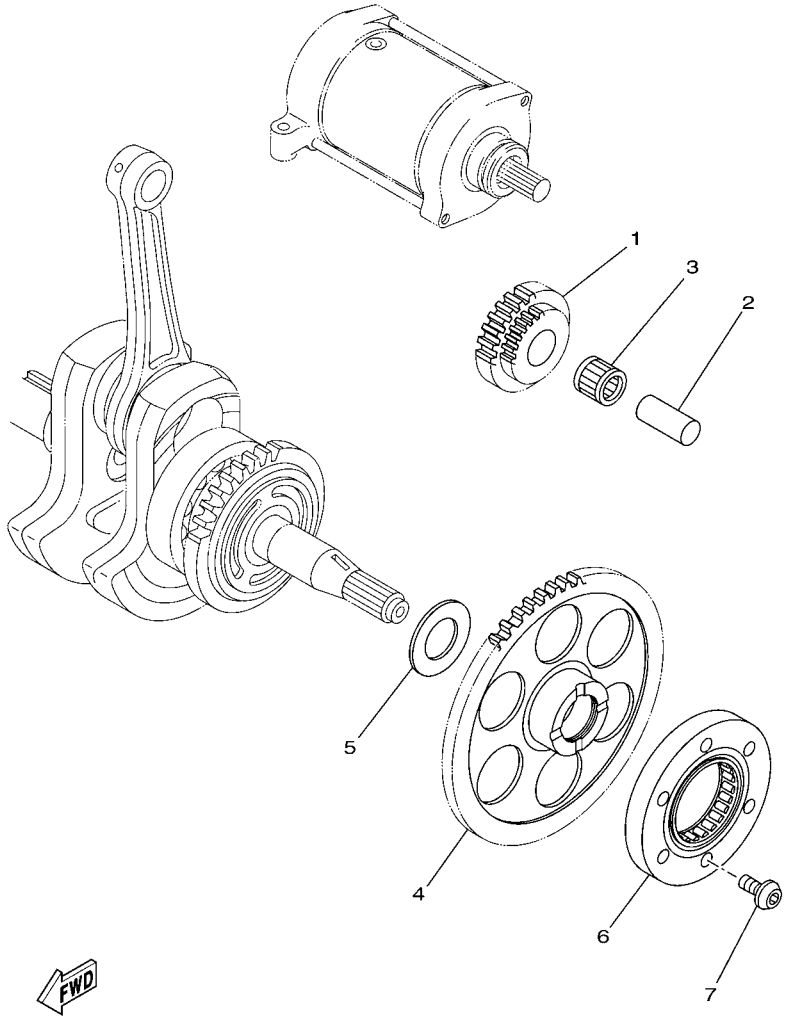

REF. NO.	PART NO.	DESCRIPTION	USA	CAN	EUR	OCE	JPN	REMARKS
1	5GH–15512–00	GEAR, IDLER 1	1	1	1	1	1	
2	5KM–15522–00	SHAFT 2	1	1	1	1	1	
3	93310–212R6	BEARING	1	1	1	1	1	
4	5KM–15517–10	GEAR, IDLER 2	1	1	1	1	1	
5	90201–25291	WASHER, PLATE	1	1	1	1	1	
6	5KM–15590–00	STARTER ONE-WAY ASSY	1	1	1	1	1	
7	91317–08016	BOLT	3	3	3	3	3	

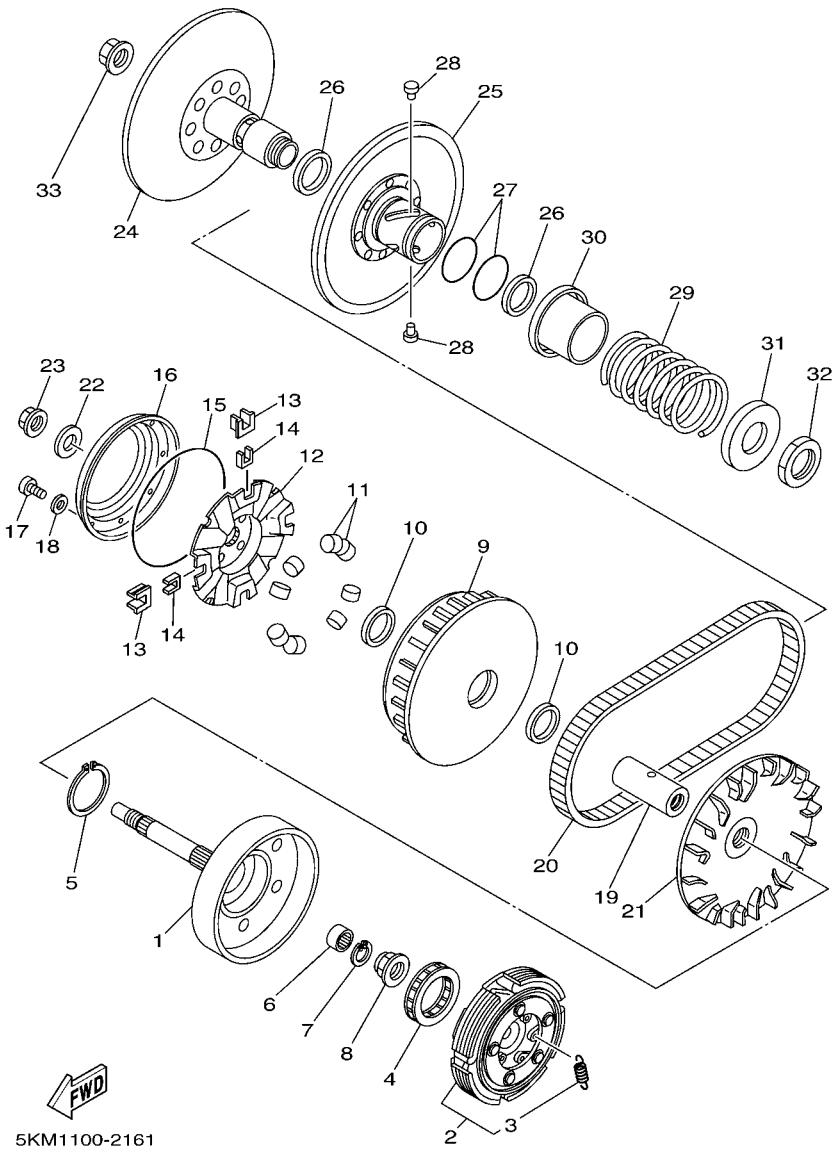

FIG. 16 CLUTCH

REF. NO.	PART NO.	DESCRIPTION	USA	CAN	EUR	OCE	JPN	REMARKS
1	5KM–16611–10	CLUTCH HOUSING COMP.	1	1	1	1	1	
2	5KM–16620–00	CLUTCH CARRIER ASSY	1	1	1	1	1	
3	5KM–16626–00	.SPRING, CLUTCH WEIGHT 1	5	5	5	5	5	
4	4SH–16664–00	BEARING, ONE WAY	1	1	1	1	1	
5	93410–46079	CIRCLIP	1	1	1	1	1	
6	93315–21813	BEARING	1	1	1	1	1	
7	93450–24062	CIRCLIP	1	1	1	1	1	
8	90179–22005	NUT	1	1	1	1	1	
9	5KM–17620–00	PRIMARY SLIDING SHEAVE COMP.	1	1	1	1	1	
10	93101–35001	OIL SEAL	2	2	2	2	2	
11	5KM–17632–00	WEIGHT	8	8	8	8	8	
12	5KM–17623–00	CAM	1	1	1	1	1	
13	4WV–17653–00	SLIDER	4	4	4	4	4	
14	4WV–17654–01	SPACER 1	4	4	4	4	4	
15	93211–594A4	O-RING	1	1	1	1	1	
16	4WV–17639–10	STOPPER	1	1	1	1	1	
17	90157–04088	SCREW, PAN HEAD	8	8	8	8	8	
18	90201–047R9	WASHER, PLATE	8	8	8	8	8	
19	5KM–17645–00	COLLAR	1	1	1	1	1	
20	5KM–17641–00	V-BELT	1	1	1	1	1	
21	5KM–17611–00	SHEAVE, PRIMARY FIXED	1	1	1	1	1	
22	90201–190T7	WASHER, PLATE	1	1	1	1	1	
23	90179–16001	NUT	1	1	1	1	1	
24	4WV–17660–10	SECONDARY FIXED SHEAVE COMP.	1	1	1	1	1	
25	4WV–17670–00	SECONDARY SLIDING SHEAVE	1	1	1	1	1	
26	93104–41119	OIL SEAL	2	2	2	2	2	
27	93210–44545	O-RING	2	2	2	2	2	

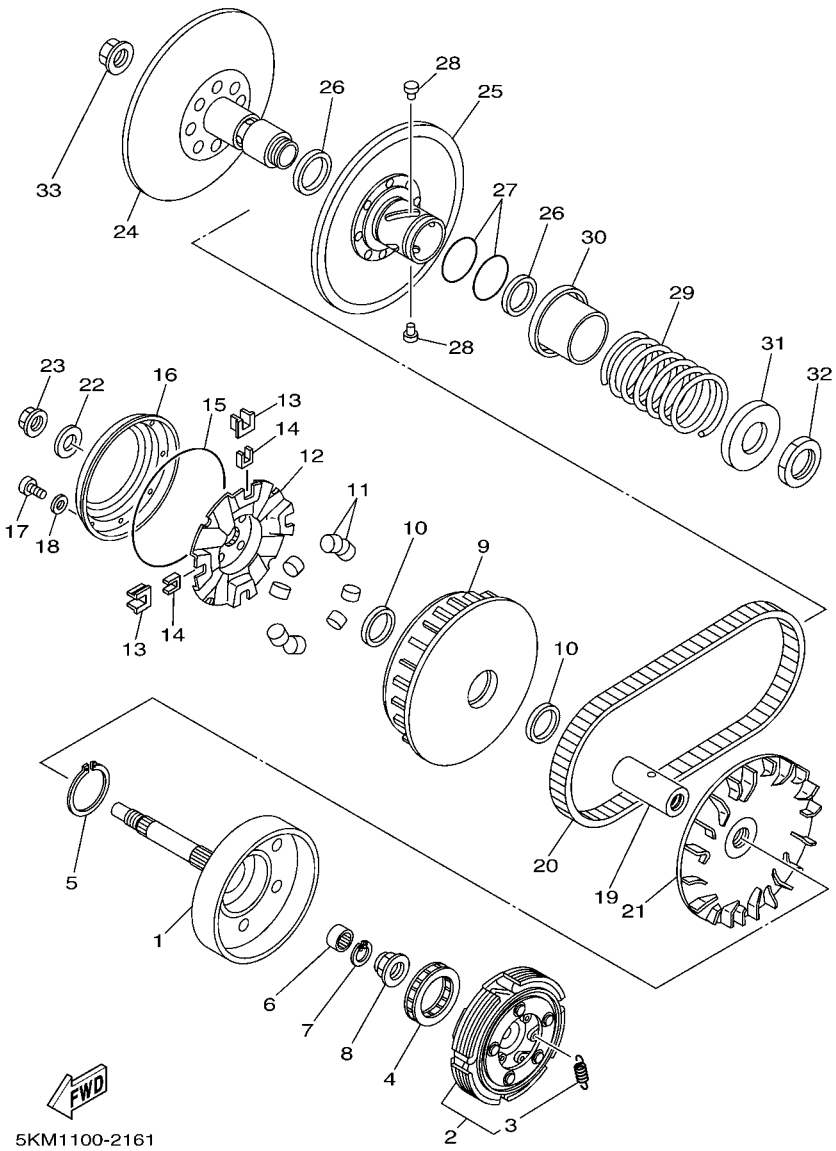

FIG. 16 CLUTCH

REF. NO.	PART NO.	DESCRIPTION	USA	CAN	EUR	OCE	JPN	REMARKS
28	4CW–17664–00	PIN, GUIDE	4	4	4	4	4	
29	90501–65001	SPRING, COMPRESSION	1	1	1	1	1	
30	4WV–17684–00	SEAT, SECONDARY SPRING	1	1	1	1	1	
31	4WV–17644–00	SEAT,SPRING	1	1	1	1	1	
32	90170–36279	NUT	1	1	1	1	1	
33	90179–16001	NUT	1	1	1	1	1	

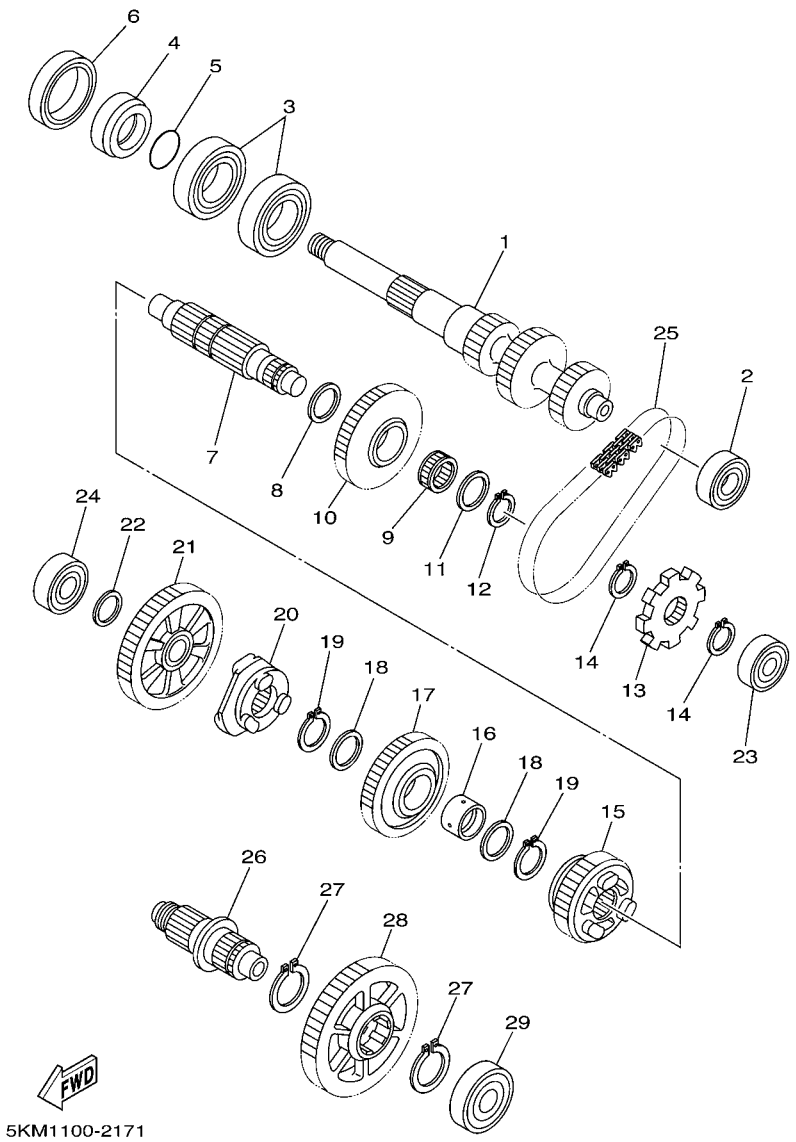

FIG. 17 TRANSMISSION

REF. NO.	PART NO.	DESCRIPTION	USA	CAN	EUR	OCE	JPN	REMARKS
1	5KM–17681–10	SHAFT, SECONDARY	1	1	1	1	1	
2	93306–20321	BEARING	1	1	1	1	1	
3	93306–00612	BEARING	2	2	2	2	2	
4	90387–26001	COLLAR	1	1	1	1	1	
5	93210–26001	O-RING	1	1	1	1	1	
6	93102–42004	OIL SEAL	1	1	1	1	1	
7	5KM–17402–01	DRIVE AXLE ASSY	1	1	1	1	1	
8	90201–20278	WASHER, PLATE	1	1	1	1	1	
9	93310–420F2	BEARING	1	1	1	1	1	
10	5KM–17453–00	SPROCKET, DRIVEN (25T)	1	1	1	1	1	
11	90201–20278	WASHER, PLATE	1	1	1	1	1	
12	93410–20038	CIRCLIP	1	1	1	1	1	
13	5KM–17473–00	STOPPER	1	1	1	1	1	
14	93410–20038	CIRCLIP	2	2	2	2	2	
15	2C6–17582–00	GEAR, MIDDLE DRIVE (21T)	1	1	1	1	1	
16	90387–250R3	COLLAR	1	1	1	1	1	
17	5KM–17223–10	GEAR, HIGH WHEEL (26T)	1	1	1	1	1	
18	90209–22082	WASHER (T=0.5)	2	2	2	2	2	
19	93440–25084	CIRCLIP	2	2	2	2	2	
20	2C6–17285–00	CLUTCH, DOG	1	1	1	1	1	
21	5UG–17233–00	GEAR, LOW WHEEL (35T)	1	1	1	1	1	
22	90201–17255	WASHER, PLATE	1	1	1	1	1	
23	93306–20221	BEARING	1	1	1	1	1	
24	93306–20332	BEARING	1	1	1	1	1	
25	94591–54034	CHAIN (23RH302-34ASM)	1	1	1	1	1	
26	5KM–17523–10	SHAFT	1	1	1	1	1	
27	93440–25084	CIRCLIP	2	2	2	2	2	

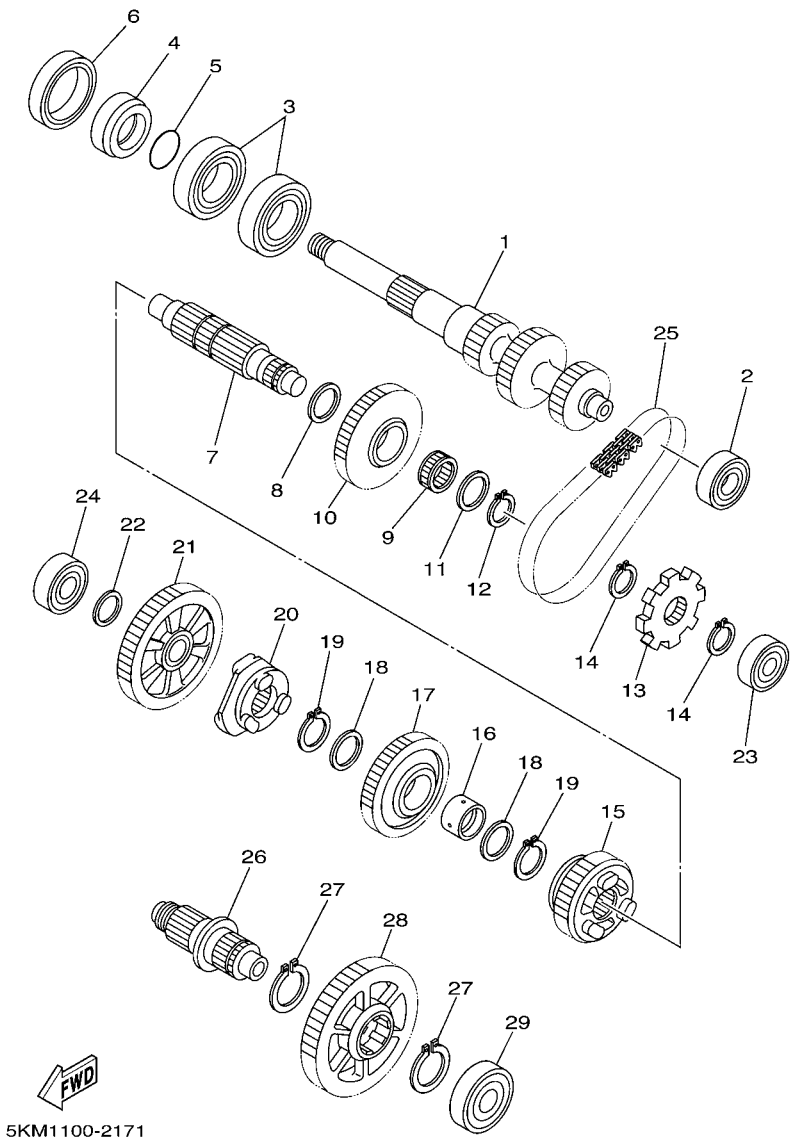

FIG. 17 TRANSMISSION

REF. NO.	PART NO.	DESCRIPTION	USA	CAN	EUR	OCE	JPN	REMARKS
28	5UG–17583–00	GEAR, MIDDLE DRIVEN (41T)	1	1	1	1	1	
29	93306–30318	BEARING	1	1	1	1	1	

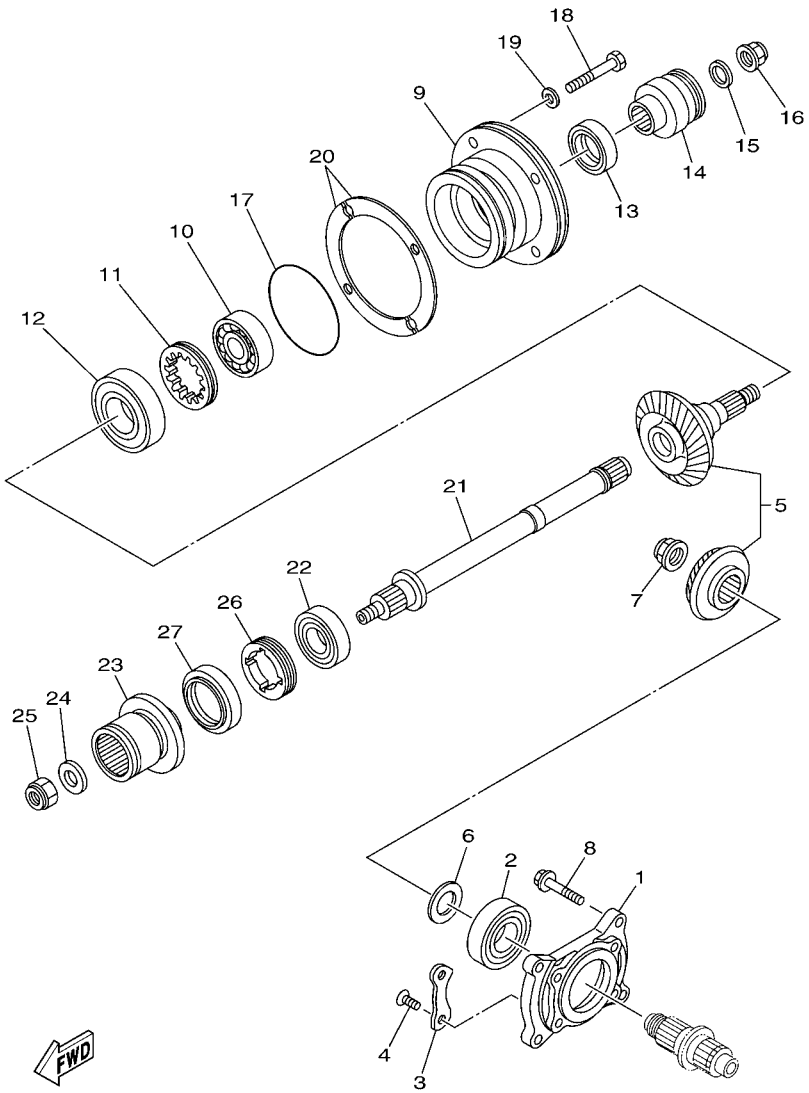

5KM9100-B180

FIG. 18 MIDDLE DRIVE GEAR

REF. NO.	PART NO.	DESCRIPTION	USA	CAN	EUR	OCE	JPN	REMARKS
1	5KM–17521–00	HOUSING, BEARING	1	1	1	1	1	
2	93306–30537	BEARING	1	1	1	1	1	
3	11H–15383–02	PLATE, BEARING COVER	2	2	2	2	2	
4	90149–08152	SCREW	4	4	4	4	4	
5	5KM–Y1754–10	MIDDLE GEAR COMP.	1	1	1	1	1	
6	5KM–17531–00	SHIM, PINION (0.1T)	1	1	1	1	1	UR
	5KM–17531–10	SHIM, PINION (0.15T)	1	1	1	1	1	UR
	5KM–17531–20	SHIM, PINION (0.2T)	1	1	1	1	1	UR
	5KM–17531–30	SHIM, PINION (0.3T)	1	1	1	1	1	UR
	5KM–17531–40	SHIM, PINION (0.4T)	1	1	1	1	1	UR
	5KM–17531–50	SHIM, PINION (0.5T)	1	1	1	1	1	UR
7	90179–22526	NUT	1	1	1	1	1	
8	95817–08030	BOLT, FLANGE	4	4	4	4	4	
9	5KM–17551–10	HOUSING, BEARING	1	1	1	1	1	
10	93306–37206	BEARING	1	1	1	1	1	
11	90179–60001	NUT	1	1	1	1	1	
12	93306–20715	BEARING	1	1	1	1	1	
13	93102–30170	OIL SEAL	1	1	1	1	1	
14	5KM–17832–00	COUPLING	1	1	1	1	1	
15	90201–170M2	WASHER, PLATE	1	1	1	1	1	
16	90179–16661	NUT	1	1	1	1	1	
17	93210–78544	O-RING	1	1	1	1	1	
18	97027–08030	BOLT	4	4	4	4	4	
19	92907–08600	WASHER, PLATE	4	4	4	4	4	
20	4KB–17531–00	SHIM, PINION (0.10T)	2	2	2	2	2	UR
	4KB–17531–10	SHIM, PINION (0.15T)	2	2	2	2	2	UR
	4KB–17531–20	SHIM, PINION (0.20T)	2	2	2	2	2	UR

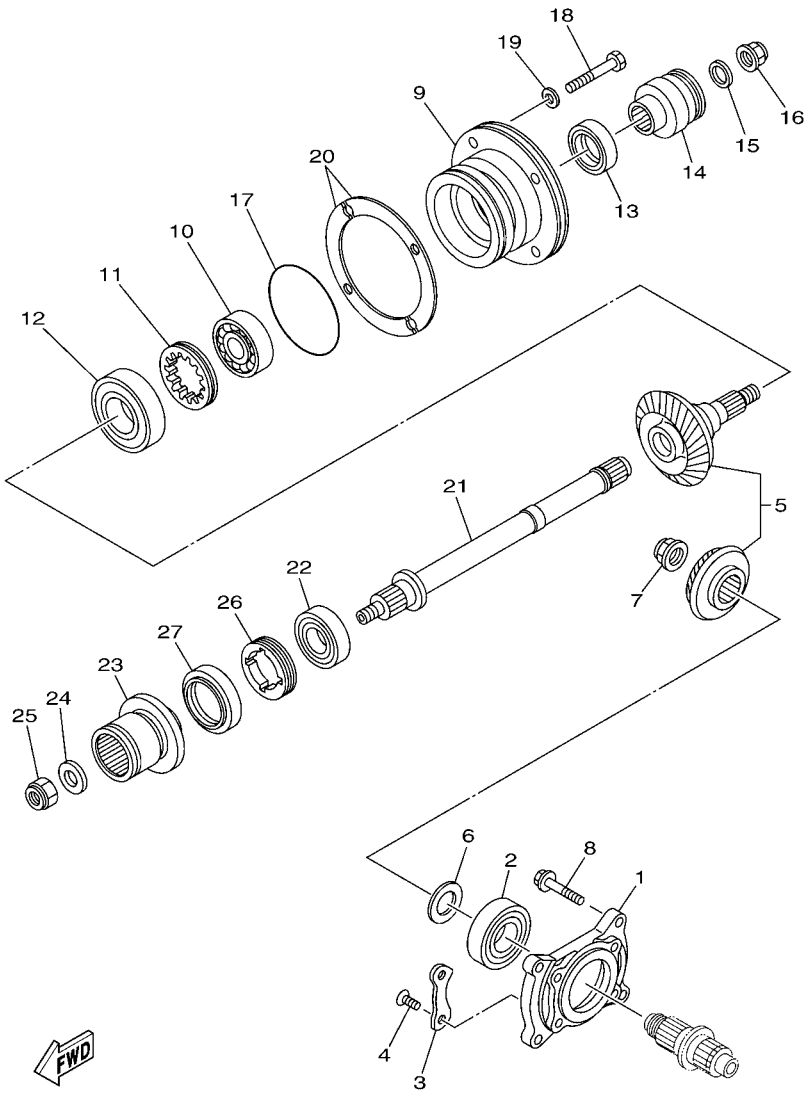

5KM9100-B180

FIG. 18 MIDDLE DRIVE GEAR

REF. NO.	PART NO.	DESCRIPTION	USA	CAN	EUR	OCE	JPN	REMARKS
20	4KB–17531–30	SHIM, PINION (0.30T)	2	2	2	2	2	UR
	4KB–17531–40	SHIM, PINION (0.40T)	2	2	2	2	2	UR
	4KB–17531–50	SHIM, PINION (0.50T)	2	2	2	2	2	UR
	4KB–17531–60	SHIM, PINION (0.60T)	2	2	2	2	2	UR
21	5KM–1761A–10	SHAFT, 1	1	1	1	1	1	
22	93306–20597	BEARING	1	1	1	1	1	
23	5KM–45593–00	FLANGE, COUPLING 1	1	1	1	1	1	
24	90201–14633	WASHER, PLATE	1	1	1	1	1	
25	90185–14070	NUT, SELF-LOCKING	1	1	1	1	1	
26	90179–55660	NUT	1	1	1	1	1	
27	93102–44454	OIL SEAL	1	1	1	1	1	

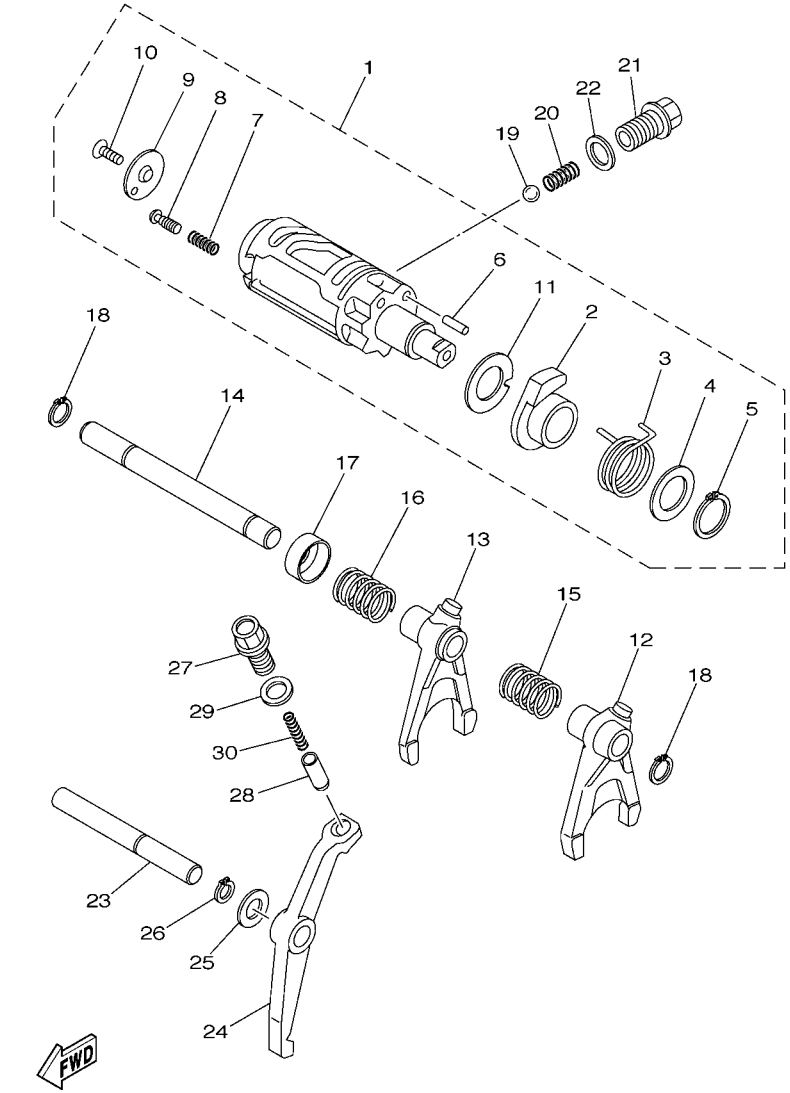

5KMH100-C190

FIG. 19 SHIFT CAM & FORK

REF. NO.	PART NO.	DESCRIPTION	USA	CAN	EUR	OCE	JPN	REMARKS
1	5KM–18540–01	SHIFT CAM ASSY	1	1	1	1	1	
2	5KM–18171–00	.CAM, LEVER	1	1	1	1	1	
3	90508–32018	.SPRING, TORSION	1	1	1	1	1	
4	90201–20792	.WASHER, PLATE	1	1	1	1	1	
5	93410–20038	.CIRCLIP	1	1	1	1	1	
6	93604–18100	.PIN, DOWEL	1	1	1	1	1	
7	90501–06022	.SPRING, COMPRESSION	1	1	1	1	1	
8	5KM–18542–00	.POINT, NEUTRAL	1	1	1	1	1	
9	4UN–18566–00	.PLATE, SIDE 2	1	1	1	1	1	
10	90149–05321	.SCREW	1	1	1	1	1	
11	5KM–18331–00	.PLATE, SHIFT CAM	1	1	1	1	1	
12	5KM–18511–00	FORK, SHIFT 1	1	1	1	1	1	
13	5KM–18512–00	FORK, SHIFT 2	1	1	1	1	1	
14	5KM–18531–01	BAR, SHIFT FORK GUIDE 1	1	1	1	1	1	
15	90501–12016	SPRING, COMPRESSION	1	1	1	1	1	
16	90501–16002	SPRING, COMPRESSION	1	1	1	1	1	
17	5KM–18323–00	CAP, SPRING	1	1	1	1	1	
18	99009–12400	CIRCLIP	2	2	2	2	2	
19	93503–08007	BALL	1	1	1	1	1	
20	90501–10353	SPRING, COMPRESSION	1	1	1	1	1	
21	90105–14367	BOLT, FLANGE	1	1	1	1	1	
22	90430–14194	GASKET	1	1	1	1	1	
23	5KM–18318–00	SHAFT, SHIFTER	1	1	1	1	1	
24	5KM–18148–00	LEVER, STOPPER	1	1	1	1	1	
25	90201–127J6	WASHER, PLATE	1	1	1	1	1	
26	99009–12400	CIRCLIP	1	1	1	1	1	
27	90109–14002	BOLT	1	1	1	1	1	

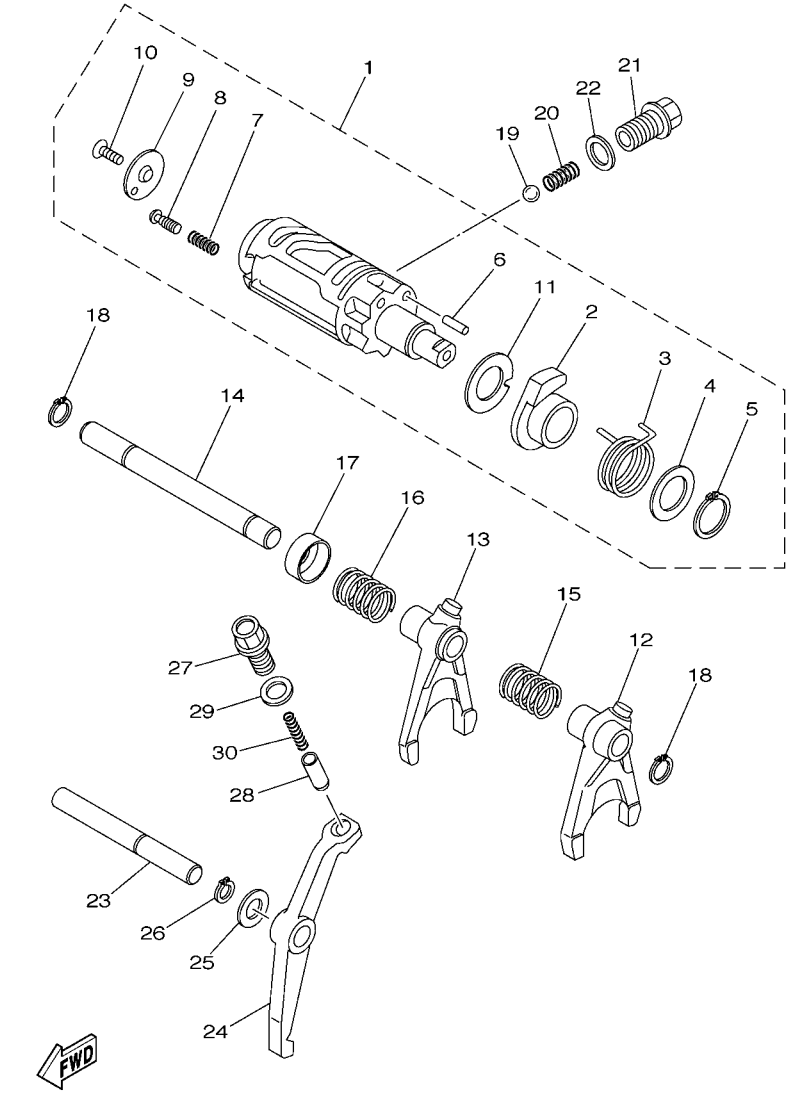

5KMH100-C190

FIG. 19 SHIFT CAM & FORK

REF. NO.	PART NO.	DESCRIPTION	USA	CAN	EUR	OCE	JPN	REMARKS
28	1J7–18547–00	STOPPER, CAM	1	1	1	1	1	
29	90430–14043	GASKET	1	1	1	1	1	
30	90501–12004	SPRING, COMPRESSION	1	1	1	1	1	

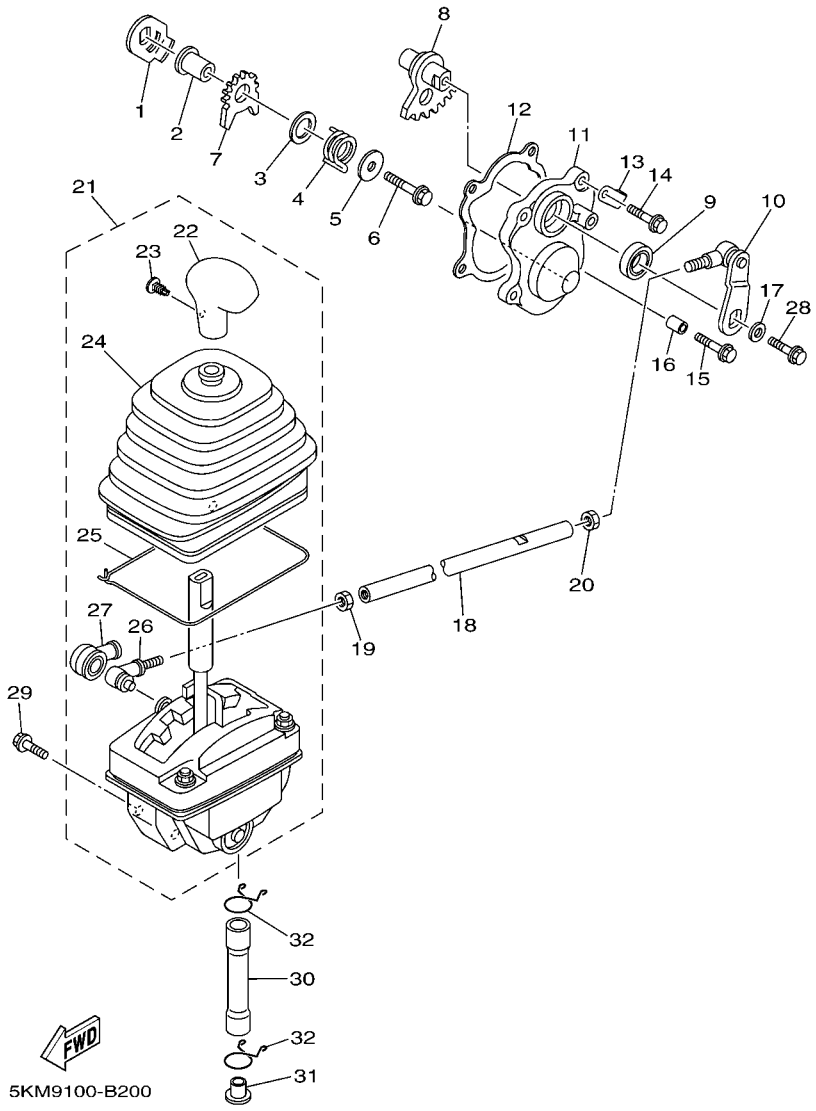

FIG. 20 SHIFT SHAFT

REF. NO.	PART NO.	DESCRIPTION	USA	CAN	EUR	OCE	JPN	REMARKS
1	4SH–18198–00	LEVER	1	1	1	1	1	
2	90387–0613B	COLLAR	1	1	1	1	1	
3	90201–132G5	WASHER, PLATE	1	1	1	1	1	
4	90508–35764	SPRING, TORSION	1	1	1	1	1	
5	90201–06008	WASHER, PLATE	1	1	1	1	1	
6	95817–06035	BOLT, FLANGE	1	1	1	1	1	
7	5KM–18191–00	LEVER	1	1	1	1	1	
8	5KM–18197–00	SHAFT	1	1	1	1	1	
9	93102–15212	OIL SEAL	1	1	1	1	1	
10	5KM–18104–00	SHIFT GUIDE COMP.	1	1	1	1	1	
11	5KM–18129–01	COVER, SHIFT SHAFT	1	1	1	1	1	
12	5KM–18146–00	GASKET	1	1	1	1	1	
13	90465–10026	CLAMP	1	1	1	1	1	
14	95027–06020	BOLT, FLANGE	3	3	3	3	3	
15	95027–06030	BOLT, FLANGE	1	1	1	1	1	
16	99530–08012	PIN, DOWEL	1	1	1	1	1	
17	90201–06008	WASHER, PLATE	1	1	1	1	1	
18	5KM–18115–10	ROD, SHIFT	1	1	1	1	1	
19	90170–08358	NUT	1	1	1	1	1	
20	95307–08700	NUT	1	1	1	1	1	
21	5KM–18300–02	SHIFTER ASSY	1	1	1	1	1	
22	5GH–18174–00	.KNOB, SHIFT LEVER	1	1	1	1	1	
23	90269–05055	.RIVET	1	1	1	1	1	
24	5KM–18131–00	.BOOT, SEALING	1	1	1	1	1	
25	5GH–18617–00	.STOPPER,RUBBER	1	1	1	1	1	
26	1KT–18157–00	.JOINT 2	1	1	1	1	1	
27	2H9–18154–00	.COVER, DUST	1	1	1	1	1	

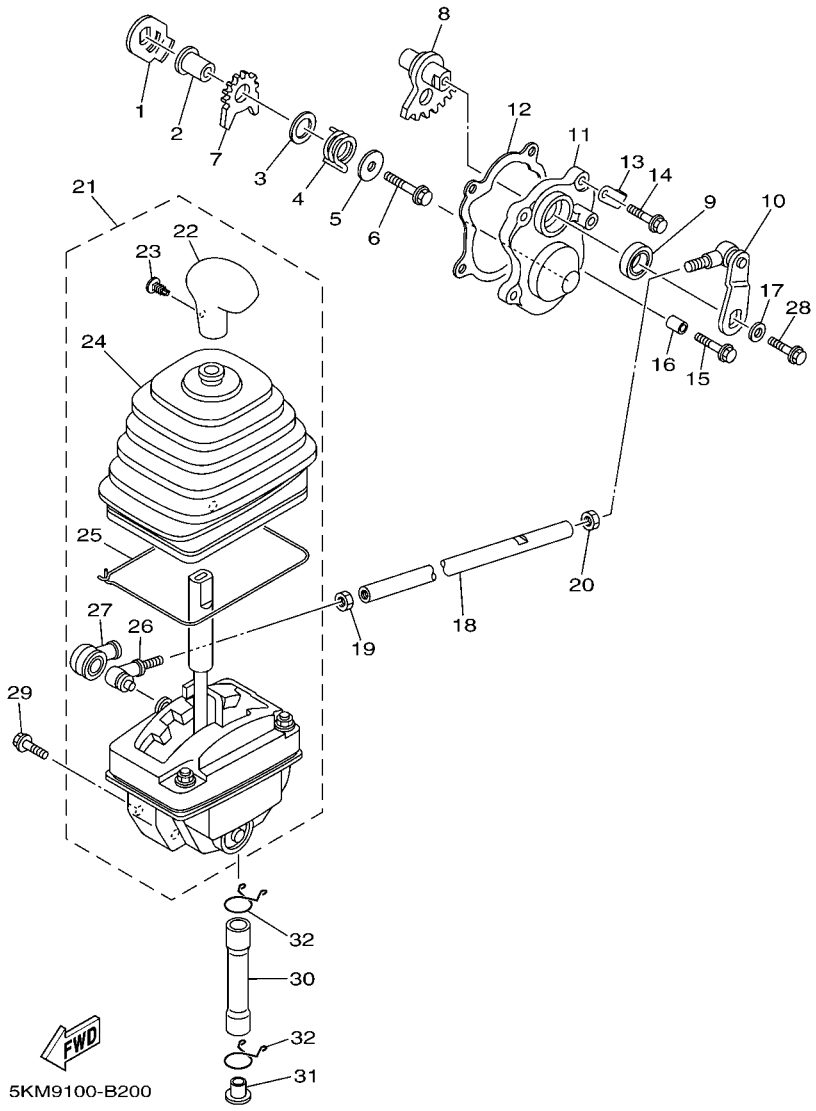

FIG. 20 SHIFT SHAFT

REF. NO.	PART NO.	DESCRIPTION	USA	CAN	EUR	OCE	JPN	REMARKS
28	95817–06016	BOLT, FLANGE	1	1	1	1	1	
29	95807–08020	BOLT, FLANGE	3	3	3	3	3	
30	90446–16001	HOSE (L90)	1	1	1	1	1	
31	90338–12081	PLUG	1	1	1	1	1	
32	90467–15012	CLIP	2	2	2	2	2	

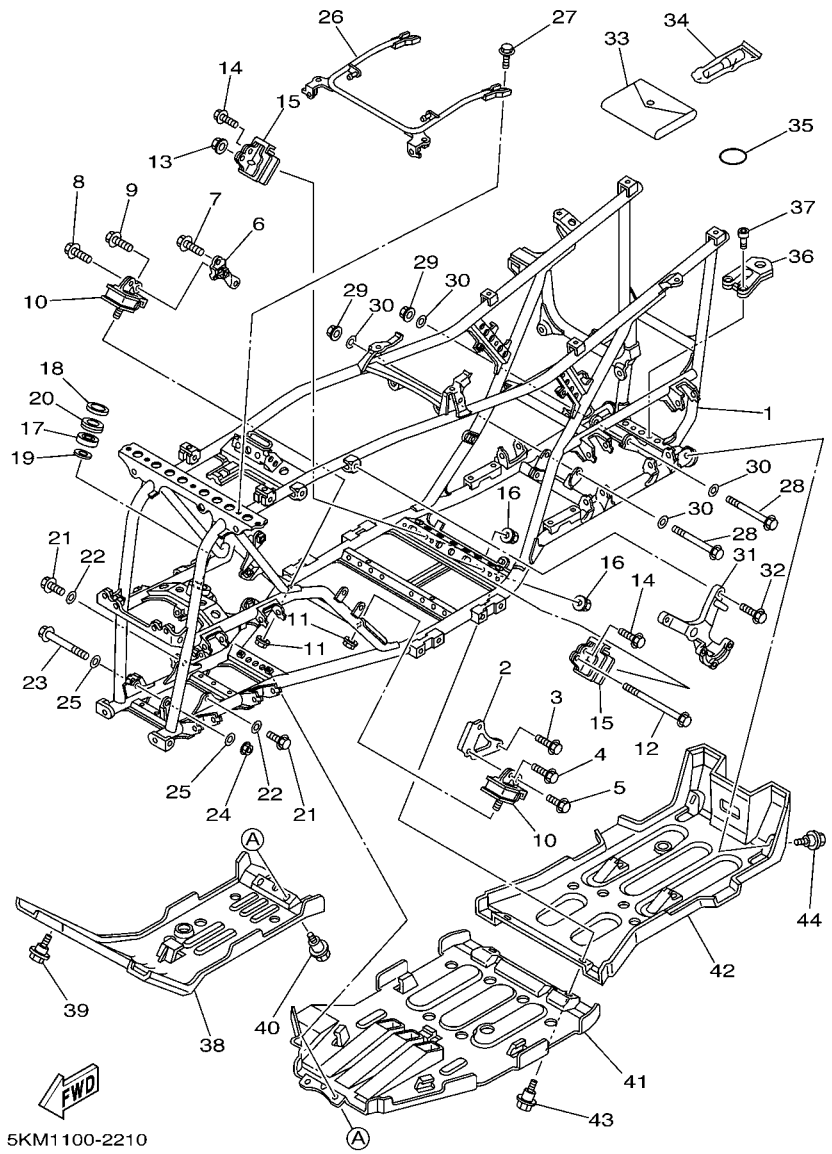

FIG. 21 FRAME

REF. NO.	PART NO.	DESCRIPTION	USA	CAN	EUR	OCE	JPN	REMARKS
1	5KM–21110–10	FRAME COMP.	1	1	1	1	1	
2	5KM–21315–00	STAY, ENGINE 2	1	1	1	1	1	
3	95817–08020	BOLT, FLANGE	2	2	2	2	2	
4	95817–08016	BOLT, FLANGE	1	1	1	1	1	
5	95027–06016	BOLT, FLANGE	1	1	1	1	1	
6	5KM–21316–00	STAY, ENGINE 3	1	1	1	1	1	
7	95817–08020	BOLT, FLANGE	2	2	2	2	2	
8	95817–08016	BOLT, FLANGE	1	1	1	1	1	
9	95027–06016	BOLT, FLANGE	1	1	1	1	1	
10	5KM–21485–10	DAMPER, RUBBER 1	2	2	2	2	2	
11	95607–10200	NUT, U FLANGE	2	2	2	2	2	
12	90105–10300	BOLT, FLANGE	1	1	1	1	1	
13	95607–10200	NUT, U FLANGE	1	1	1	1	1	
14	95027–06016	BOLT, FLANGE	2	2	2	2	2	
15	5KM–21486–10	DAMPER 2	2	2	2	2	2	
16	95607–10200	NUT, U FLANGE	2	2	2	2	2	
17	93306–20331	BEARING	1	1	1	1	1	
18	93102–25081	OIL SEAL	1	1	1	1	1	
19	93102–25099	OIL SEAL	1	1	1	1	1	
20	5GT–23872–00	HOLDER, BEARING	1	1	1	1	1	
21	95817–10030	BOLT, FLANGE	2	2	2	2	2	
22	90201–101J1	WASHER, PLATE	2	2	2	2	2	
23	90105–10051	BOLT, FLANGE	1	1	1	1	1	
24	95607–10200	NUT, U FLANGE	1	1	1	1	1	
25	90201–101J1	WASHER, PLATE	2	2	2	2	2	
26	5KM–21513–00	STAY, FENDER 1	1	1	1	1	1	
27	95827–06012	BOLT, FLANGE	2	2	2	2	2	

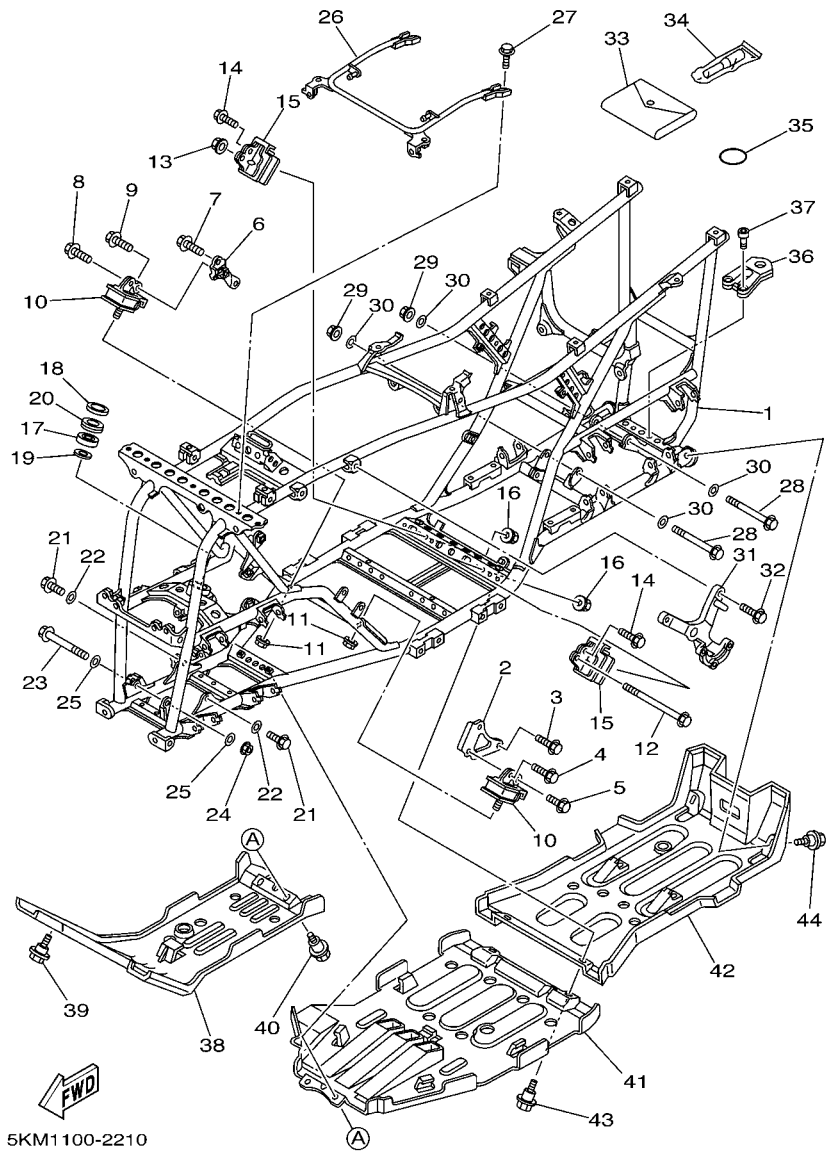

FIG. 21 FRAME

REF. NO.	PART NO.	DESCRIPTION	USA	CAN	EUR	OCE	JPN	REMARKS
28	90105–10051	BOLT, FLANGE	2	2	2	2	2	
29	95607–10200	NUT, U FLANGE	2	2	2	2	2	
30	90201–101J1	WASHER, PLATE	4	4	4	4	4	
31	5KM–21585–00	ARM	1	1	1	1	1	
32	95827–08020	BOLT, FLANGE	2	2	2	2	2	
33	4WV–28100–00	TOOL KIT	1	1	1	1	1	
34	1NV–2811A–01	GAUGE, AIR	1	1	1	1	1	
35	93210–41041	O-RING	1	1	1	1	1	
36	5KM–28488–00	HOOK	1	1	1		1	
	5KM–28488–10	HOOK				1		
37	91317–10025	BOLT	2	2	2	2	2	
38	5KM–2147A–00	GUARD, ENGINE 1	1	1	1	1	1	
39	90109–063F1	BOLT	2	2	2	2	2	
40	90109–063F5	BOLT	2	2	2	2	2	
41	5KM–2147E–00	GUARD, ENGINE 2	1	1	1	1	1	
42	5KM–2147F–00	GUARD, ENGINE 3	1	1	1	1	1	
43	90109–063F5	BOLT	2	2	2	2	2	
44	90109–063F1	BOLT	2	2	2	2	2	

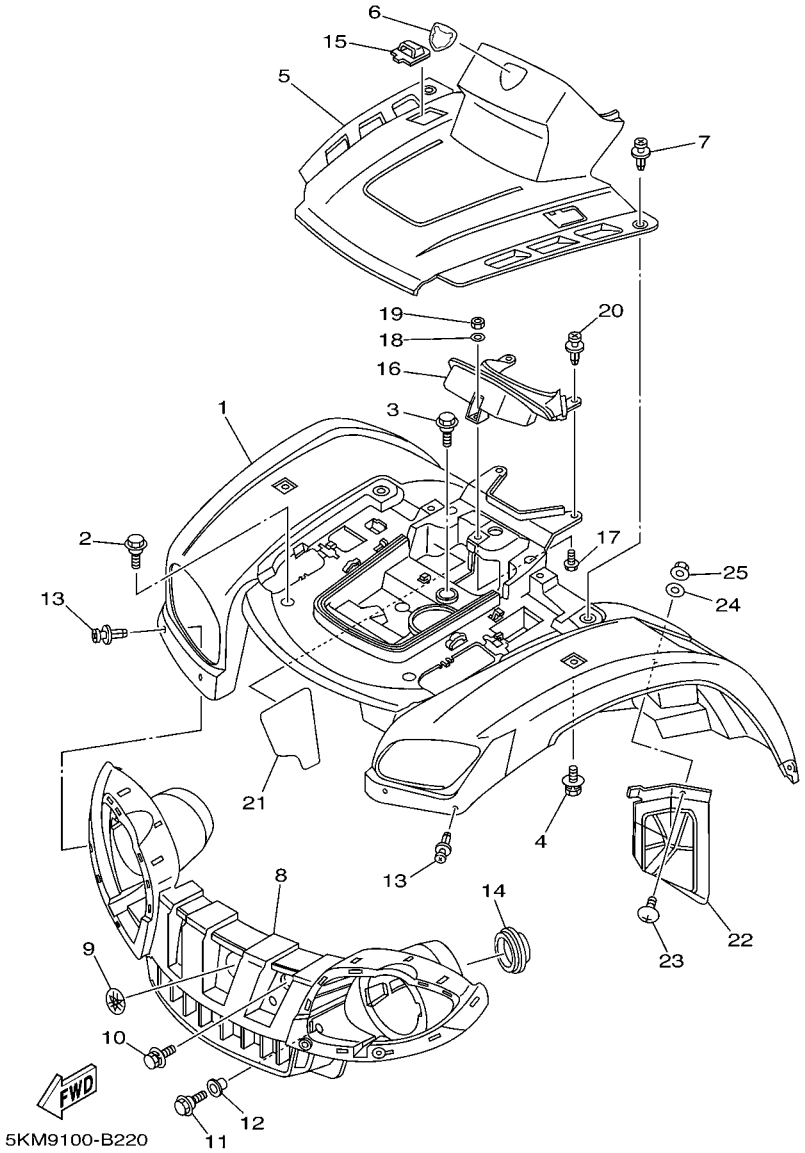

FIG. 22 FRONT FENDER

REF. NO.	PART NO.	DESCRIPTION	USA	CAN	EUR	OCE	JPN	REMARKS
1	5KM–W2151–00	FRONT FENDER COMP.	1					UR FOR PDG
	5KM–W2151–10	FRONT FENDER COMP.	1					UR FOR RTR
	5KM–W2151–40	FRONT FENDER COMP.	1					UR FOR DPBSN
	5KM–W215C–00	FRONT FENDER COMP.2		1				UR FOR PDG
	5KM–W215C–10	FRONT FENDER COMP.2		1				UR FOR RTR
	5KM–W215C–40	FRONT FENDER COMP.2		1				UR FOR DPBSN
	5KM–W215B–00	FRONT FENDER COMP. 2			1			UR FOR PDG
	5KM–W215B–10	FRONT FENDER COMP. 2			1			UR FOR RTR
	5KM–W215B–30	FRONT FENDER COMP. 2			1			UR FOR DPBSE
	5KM–W215E–30	FRONT FENDER COMP.				1		FOR DPBSE
	5KM–W215D–00	FRONT FENDER COMP. 2					1	FOR PDG
2	90109–063F1	BOLT	2	2	2	2	2	
3	90109–063F1	BOLT	1	1	1	1	1	
4	90119–06056	BOLT, WITH WASHER	2	2	2	2	2	
5	5KM–23391–00	PANEL, FRONT	1	1	1	1	1	
6	5FE–26232–00	EMBLEM 3D	1	1	1	1	1	
7	90269–07076	RIVET	2	2	2	2	2	
8	5KM–28309–00	GRILLE, FRONT	1		1	1	1	
	5KM–28309–10	GRILLE, FRONT		1				
9	5KM–2175B–00	TUNING FORK MARK	1	1	1	1	1	
10	90119–06056	BOLT, WITH WASHER	2	2	2	2	2	
11	95807–06016	BOLT, FLANGE	2	2	2	2	2	
12	90387–06648	COLLAR	2	2	2	2	2	
13	90269–07076	RIVET	4	4	4	4	4	
14	5GH–28349–00	CAP	2	2	2	2	2	
15	5KM–23338–00	CAP, SIDE 1	2	2	2	2	2	
16	5KM–2837L–00	PANEL, CONSOLE 1	1	1	1	1	1	

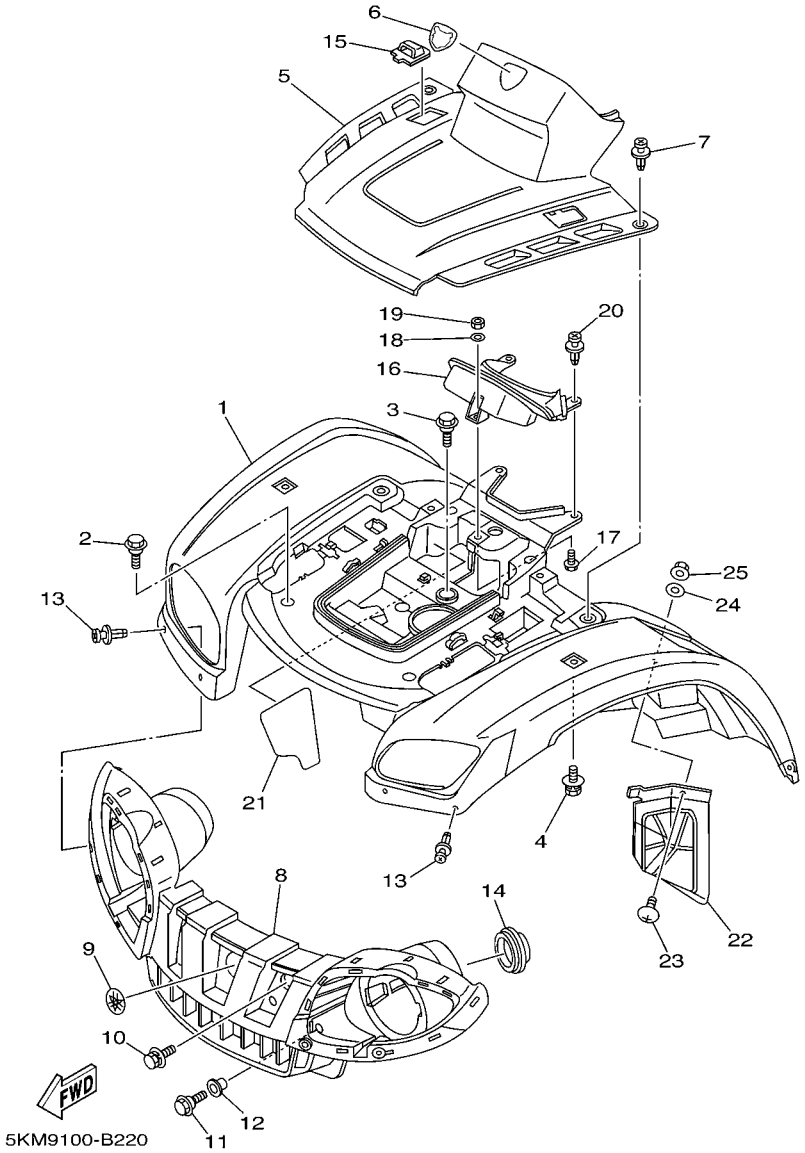

FIG. 22 FRONT FENDER

REF. NO.	PART NO.	DESCRIPTION	USA	CAN	EUR	OCE	JPN	REMARKS
17	90109–063F5	BOLT	1	1	1	1	1	
18	90201–07081	WASHER, PLATE	1	1	1	1	1	
19	95317–06600	NUT	1	1	1	1	1	
20	90269–07076	RIVET	2	2	2	2	2	
21	5KM–21575–10	SEAL 1	1	1	1	1	1	
22	5KM–2193A–00	PROTECTOR	1	1	1	1	1	
23	90149–06021	SCREW	1	1	1	1	1	
24	90201–06557	WASHER, PLATE	1	1	1	1	1	
25	95707–06300	NUT, FLANGE	1	1	1	1	1	

FIG. 23 REAR FENDER

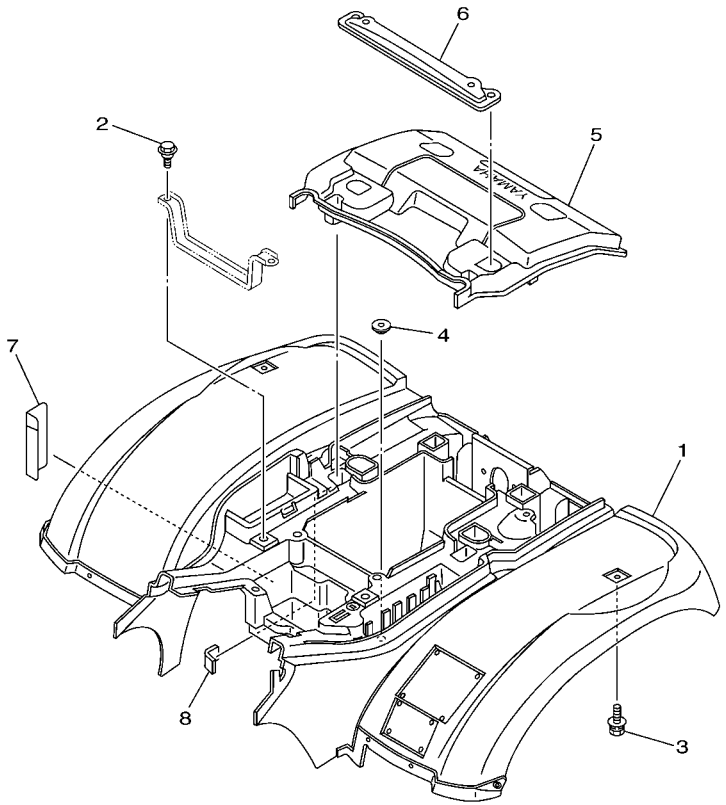

5KM9100-B230

REF. NO.	PART NO.	DESCRIPTION	USA	CAN	EUR	OCE	JPN	REMARKS
1	5KM–W2161–01	REAR FENDER COMP.	1				1	UR FOR PDG
	5KM–W2161–11	REAR FENDER COMP.	1					UR FOR RTR
	5KM–W2161–41	REAR FENDER COMP.	1					UR FOR DPBSN
	5KM–W216C–01	REAR FENDER COMP.2		1				UR FOR PDG
	5KM–W216C–11	REAR FENDER COMP.2		1				UR FOR RTR
	5KM–W216C–41	REAR FENDER COMP.2		1				UR FOR DPBSN
	5KM–W216B–01	REAR FENDER COMP.2			1			UR FOR PDG
	5KM–W216B–11	REAR FENDER COMP.2			1			UR FOR RTR
	5KM–W216D–31	REAR FENDER COMP			1			UR FOR DPBSE
	5KM–W216B–31	REAR FENDER COMP.2				1		FOR DPBSE
2	90109–060F3	BOLT	2	2	2	2	2	
3	90119–06056	BOLT, WITH WASHER	2	2	2	2	2	
4	90338–09130	PLUG	1	1	1	1	1	
5	5KM–2160F–40	LID	1	1	1	1	1	
6	5KM–21613–00	STAY, FENDER 1	1	1	1	1	1	
7	5GH–2163E–00	COVER, REAR FENDER 2	1	1	1	1	1	
8	5KM–21652–10	PROTECTOR	1	1	1	1	1	

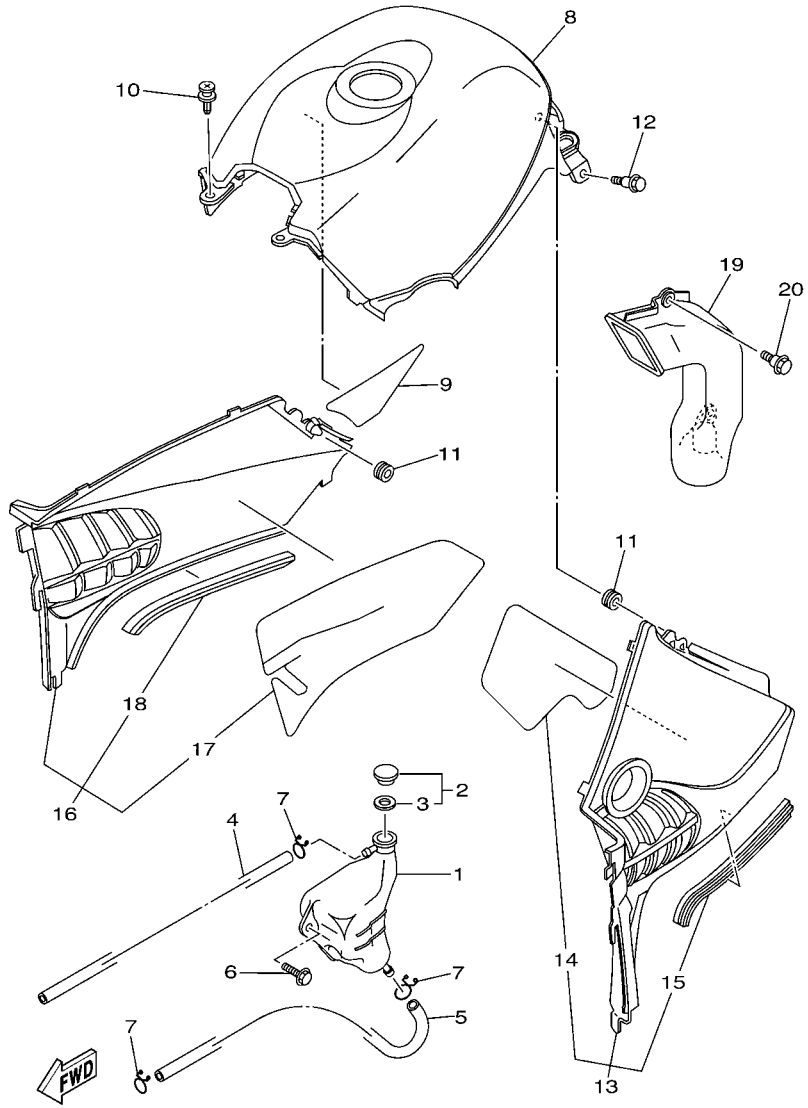

5KMT171-C240

FIG. 24 SIDE COVER

REF. NO.	PART NO.	DESCRIPTION	USA	CAN	EUR	OCE	JPN	REMARKS
1	5KM–21871–00	TANK, RECOVERY	1	1	1	1	1	
2	1AA–21815–00	CAP	1	1	1	1	1	
3	1AA–21874–00	.GASKET	1	1	1	1	1	
4	90445–096F4	HOSE (L870)	1	1	1	1	1	
5	90445–09635	HOSE (L910)	1	1	1	1	1	
6	90119–06056	BOLT, WITH WASHER	2	2	2	2	2	
7	90467–08003	CLIP	3	3	3	3	3	
8	5KM–2171A–00	COVER, TOP	1	1	1		1	UR FOR PDG
	5KM–2171A–10	COVER, TOP	1	1	1			UR FOR RTR
	5KM–2171A–40	COVER, TOP	1	1				UR FOR DPBSN
	5KM–2171A–30	COVER, TOP			1	1		UR FOR DPBSE
9	5KM–2174M–10	CLOTH, PROTECTOR	1	1	1	1	1	
10	90269–07076	RIVET	2	2	2	2	2	
11	90480–13567	GROMMET	2	2	2	2	2	
12	90109–063F1	BOLT	2	2	2	2	2	
13	5KM–21710–10	SIDE COVER ASSY 1	1	1	1	1	1	
14	5KM–2174A–20	.INSULATOR, SIDE COVER	1	1	1	1	1	
15	5KM–2171L–00	.MOLE, SIDE COVER 1	1	1	1	1	1	
16	5KM–21720–10	SIDE COVER ASSY 2	1	1	1	1	1	
17	5KM–2174T–20	.INSULATOR, SIDE COVER 2	1	1	1	1	1	
18	5KM–2171L–00	.MOLE, SIDE COVER 1	1	1	1	1	1	
19	5KM–21557–00	DUCT, AIR	1	1	1	1	1	
20	90109–063F1	BOLT	2	2	2	2	2	

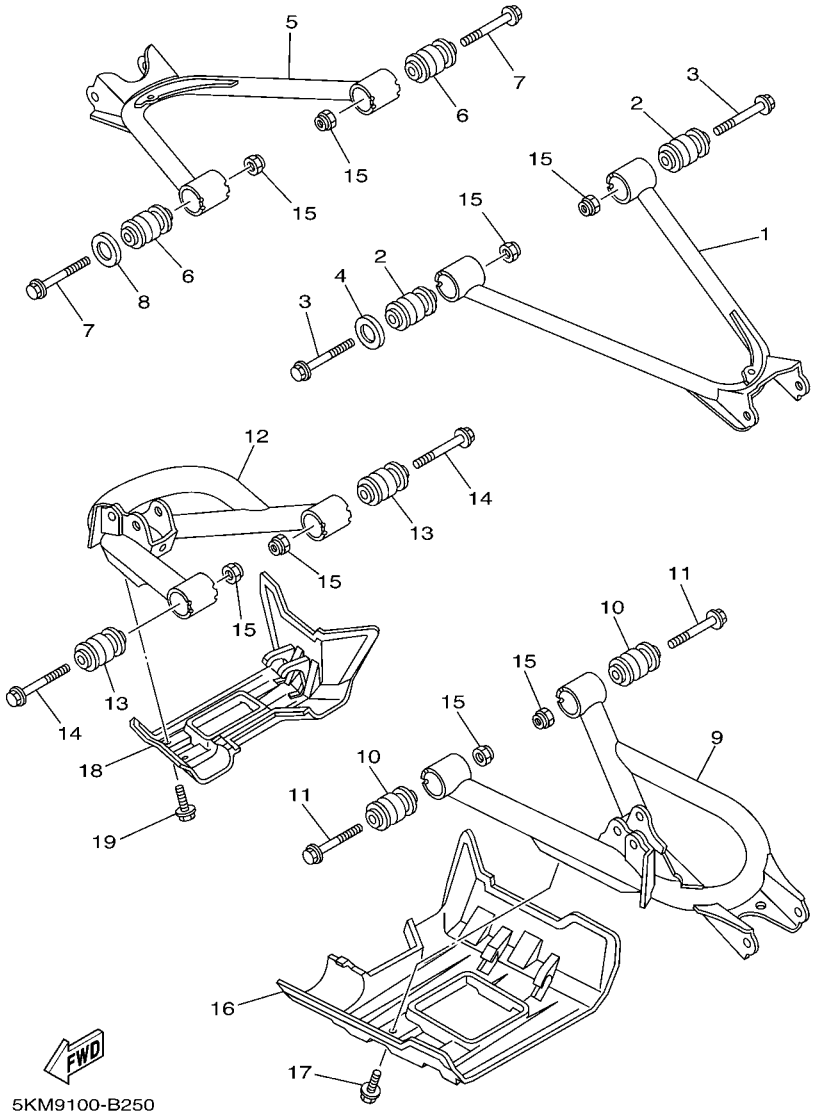

FIG. 25 REAR ARM

REF. NO.	PART NO.	DESCRIPTION	USA	CAN	EUR	OCE	JPN	REMARKS
1	5KM–22171–00	ARM, REAR 1	1	1	1	1	1	
2	5KM–23526–10	BUSH	2	2	2	2	2	
3	90105–10323	BOLT, FLANGE	2	2	2	2	2	
4	5KM–22149–00	WASHER	1	1	1	1	1	
5	5KM–22172–00	ARM, REAR 2	1	1	1	1	1	
6	5KM–23526–10	BUSH	2	2	2	2	2	
7	90105–10323	BOLT, FLANGE	2	2	2	2	2	
8	5KM–22149–00	WASHER	1	1	1	1	1	
9	5KM–2217M–00	ARM 1	1	1	1	1	1	
10	5KM–23526–10	BUSH	2	2	2	2	2	
11	90105–10323	BOLT, FLANGE	2	2	2	2	2	
12	5KM–2217N–00	ARM 2	1	1	1	1	1	
13	5KM–23526–10	BUSH	2	2	2	2	2	
14	90105–10323	BOLT, FLANGE	2	2	2	2	2	
15	90185–10060	NUT, SELF-LOCKING	8	8	8	8	8	
16	5KM–22128–00	COVER, THRUST 1	1	1	1	1	1	
17	90119–06117	BOLT, WITH WASHER	2	2	2	2	2	
18	5KM–22129–00	COVER, THRUST 2	1	1	1	1	1	
19	90119–06117	BOLT, WITH WASHER	2	2	2	2	2	

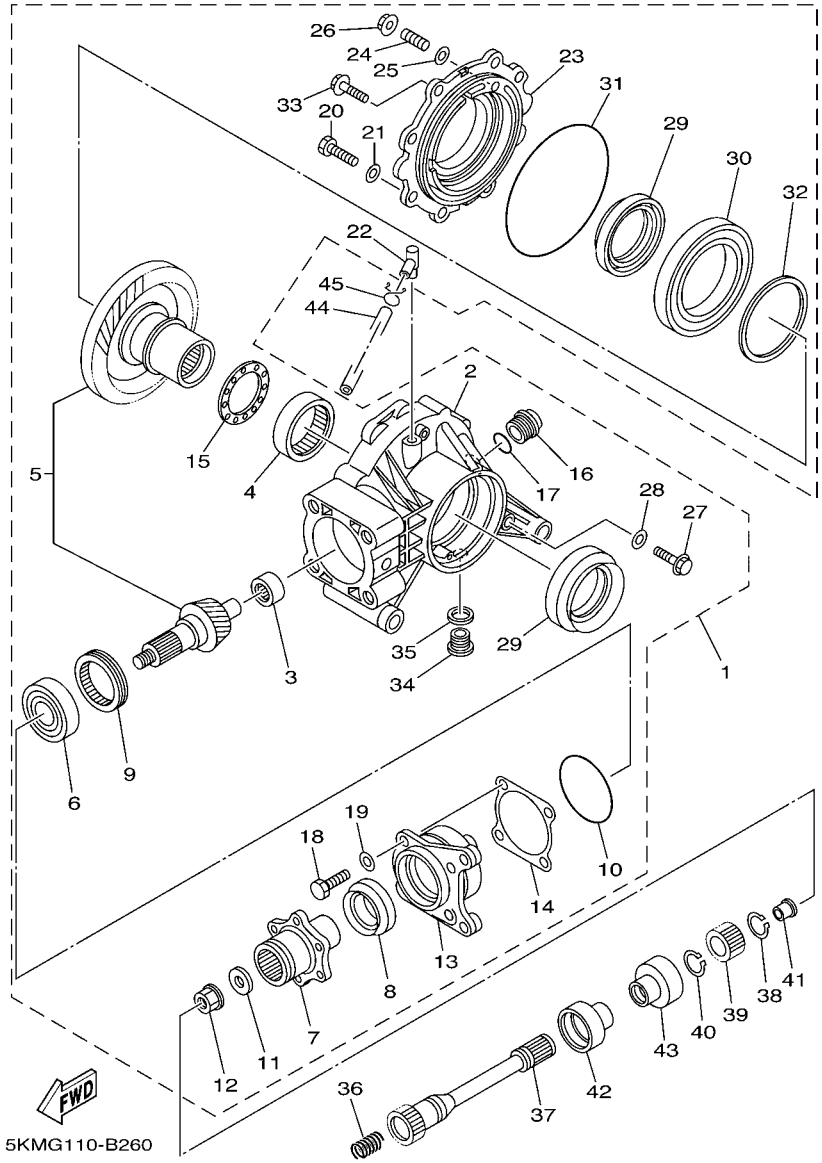

FIG. 26 DRIVE SHAFT

REF. NO.	PART NO.	DESCRIPTION	USA	CAN	EUR	OCE	JPN	REMARKS
1	5KM–46101–12	REAR AXLE GEAR CASE ASSY	1	1	1	1	1	
2	5KM–46151–02	.HOUSING, DRIVE SHAFT	1	1	1	1	1	
3	5KM–46102–00	.BEARING ASSY	1	1	1	1	1	
4	93317–85569	.BEARING	1	1	1	1	1	
5	5KM–Y4612–00	.RING GEAR SET	1	1	1	1	1	
6	93306–30574	.BEARING	1	1	1	1	1	
7	5KM–46212–00	.BOSS, 1	1	1	1	1	1	
8	93102–35009	.OIL SEAL	1	1	1	1	1	
9	90179–65001	.NUT	1	1	1	1	1	
10	93210–626A7	.O-RING	1	1	1	1	1	
11	90201–12191	.WASHER, PLATE	1	1	1	1	1	
12	90179–12325	.NUT	1	1	1	1	1	
13	5KM–46144–01	.HOUSING, PINION BEARING	1	1	1	1	1	
14	2HR–46127–00–25	.SHIM, DRIVE PISTON (0.25T)	1	1	1	1	1	UR
	2HR–46127–00–30	.SHIM, DRIVE PISTON (0.30T)	1	1	1	1	1	UR
	2HR–46127–00–35	.SHIM, DRIVE PISTON (0.35T)	1	1	1	1	1	UR
	2HR–46127–00–40	.SHIM, DRIVE PISTON (0.40T)	1	1	1	1	1	UR
	2HR–46127–00–45	.SHIM, DRIVE PISTON (0.45T)	1	1	1	1	1	UR
	2HR–46127–00–50	.SHIM, DRIVE PISTON (0.50T)	1	1	1	1	1	UR
15	24W–46118–00–12	.WASHER, THRUST (1.2T)	1	1	1	1	1	UR
	24W–46118–00–14	.WASHER, THRUST (1.4T)	1	1	1	1	1	UR
	24W–46118–00–16	.WASHER, THRUST (1.6T)	1	1	1	1	1	UR
	24W–46118–00–18	.WASHER, THRUST (1.8T)	1	1	1	1	1	UR
	24W–46118–00–20	.WASHER, THRUST (2.0T)	1	1	1	1	1	UR
16	90340–20143	.PLUG, STRAIGHT SCREW	1	1	1	1	1	
17	93210–19123	.O-RING	1	1	1	1	1	
18	97017–08035	.BOLT	4	4	4	4	4	

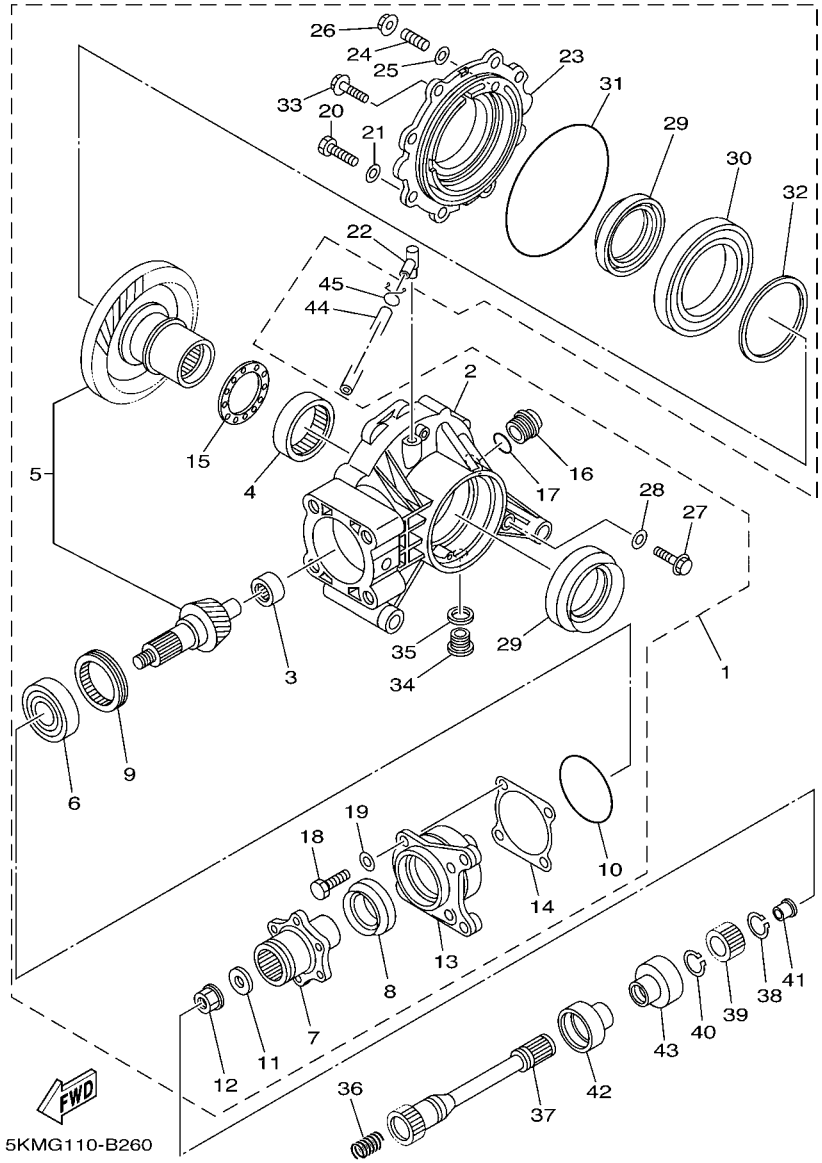

FIG. 26 DRIVE SHAFT

REF. NO.	PART NO.	DESCRIPTION	USA	CAN	EUR	OCE	JPN	REMARKS
19	92907–08600	.WASHER, PLATE	4	4	4	4	4	
20	97027–08025	.BOLT	6	6	6	6	6	
21	92907–08600	.WASHER, PLATE	6	6	6	6	6	
22	5UG–15371–00	.BREATHER	1	1	1	1	1	
23	5KM–46152–00	.HOUSING, BEARING	1	1	1	1	1	
24	2HR–46156–00	.STOPPER, RING GEAR	1	1	1	1	1	
25	90201–08087	.WASHER, PLATE	1	1	1	1	1	
26	95707–08500	.NUT, FLANGE	1	1	1	1	1	
27	95027–08012	.BOLT, FLANGE	1	1	1	1	1	
28	90201–08087	.WASHER, PLATE	1	1	1	1	1	
29	93102–65004	.OIL SEAL	2	2	2	2	2	
30	93316–01701	.BEARING	1	1	1	1	1	
31	93211–51749	.O-RING	1	1	1	1	1	
32	22U–46117–00–25	.SHIM, RING GEAR (0.25T)	1	1	1	1	1	UR
	22U–46117–00–30	.SHIM, RING GEAR (0.30T)	1	1	1	1	1	UR
	22U–46117–00–40	.SHIM, RING GEAR (0.40T)	1	1	1	1	1	UR
33	95817–10025	.BOLT, FLANGE	2	2	2	2	2	
34	90340–14046	.PLUG, STRAIGHT SCREW	1	1	1	1	1	
35	214–11198–01	.GASKET	1	1	1	1	1	
36	90501–18002	SPRING, COMPRESSION	1	1	1	1	1	
37	5KM–46172–00	SHAFT, DRIVE	1	1	1	1	1	
38	99009–19400	CIRCLIP	1	1	1	1	1	
39	5KM–46126–00	COUPLING	1	1	1	1	1	
40	93410–22039	CIRCLIP	1	1	1	1	1	
41	5KM–46559–00	DAMPER	1	1	1	1	1	
42	5KM–46137–00	SEAL 2	1	1	1	1	1	
43	5KM–46136–00	SEAL 1	1	1	1	1	1	

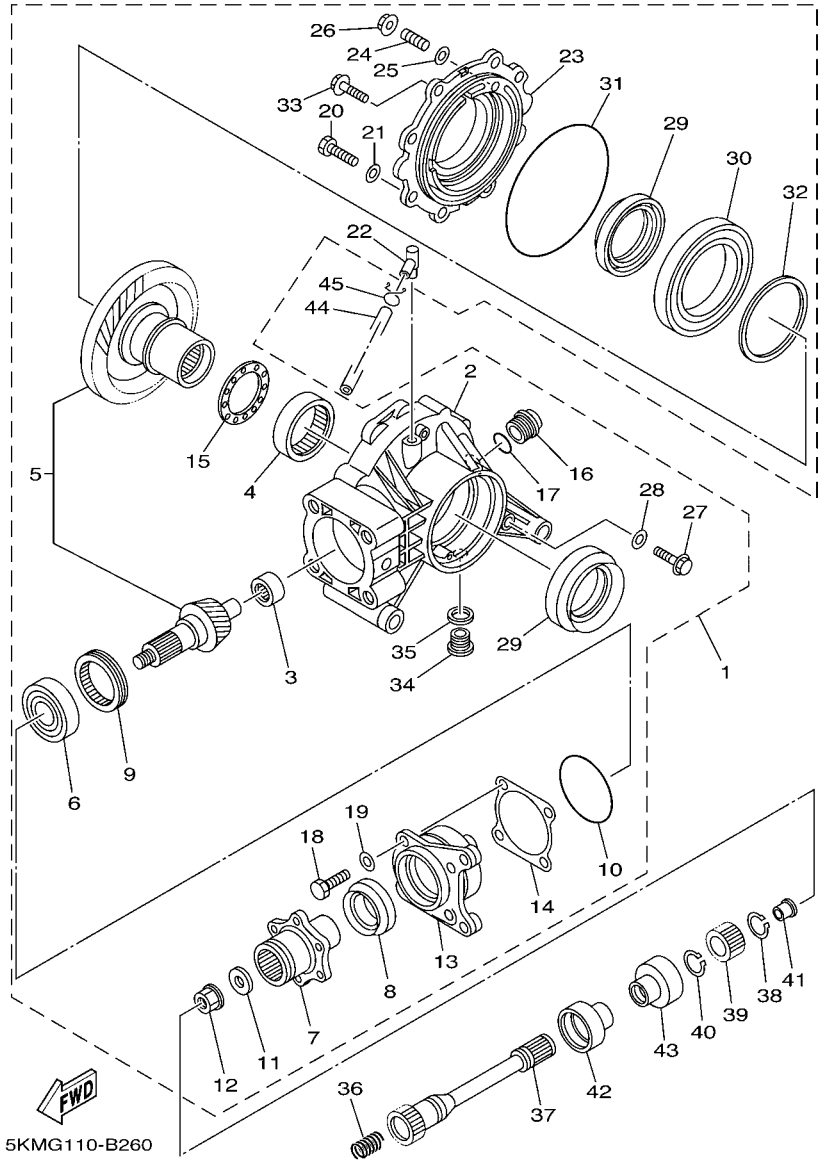

FIG. 26 DRIVE SHAFT

REF. NO.	PART NO.	DESCRIPTION	USA	CAN	EUR	OCE	JPN	REMARKS
44	90445–07371	HOSE (L700)	1	1	1	1	1	
45	90467–07029	CLIP	1	1	1	1	1	

FIG. 27 FRONT DIFFERENTIAL

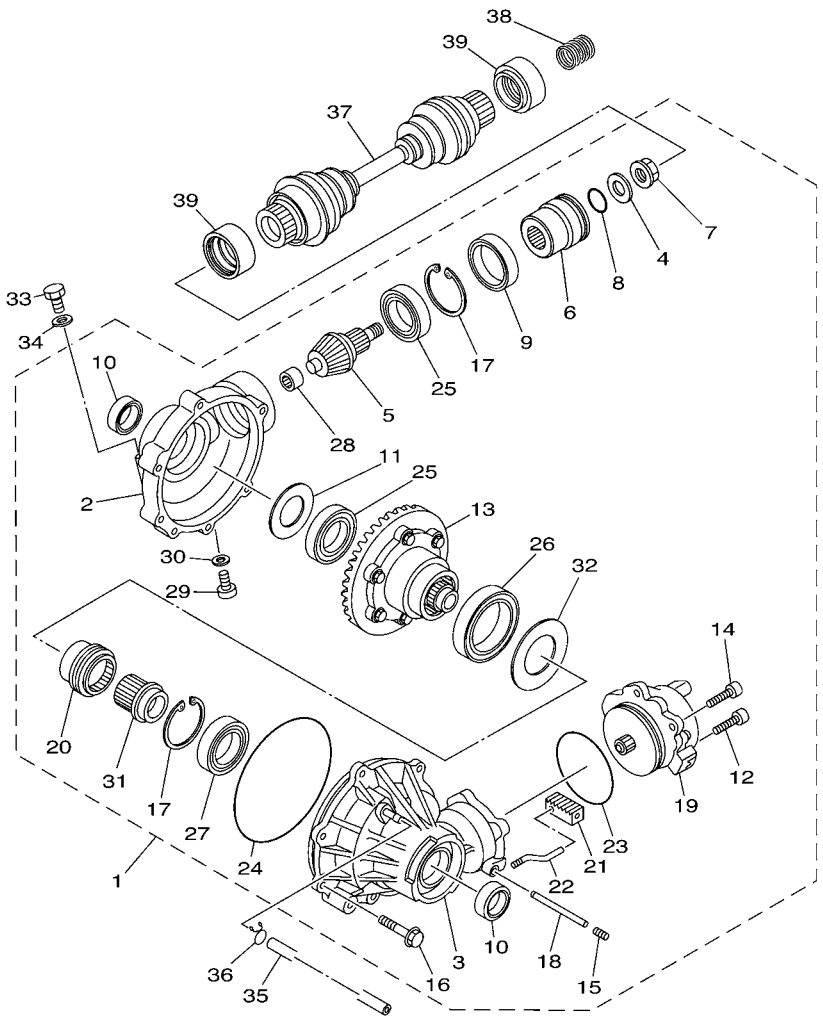

5KMU100-D271

REF. NO.	PART NO.	DESCRIPTION	USA	CAN	EUR	OCE	JPN	REMARKS
1	5KM–46160–12	FRONT AXLE GEAR CASE COMP.	1	1	1	1	1	
2	5KM–46161–00	.HOUSING, SHAFT DRIVE 2	1	1	1	1	1	
3	5KM–46162–00	.HOUSING, BEARING 2	1	1	1	1	1	
4	90201–14633	.WASHER, PLATE	1	1	1	1	1	
5	5KM–46141–11	.PINION, DRIVE 2	1	1	1	1	1	
6	5KM–67839–00	.CUPLING	1	1	1	1	1	
7	4WV–46145–00	.NUT 1	1	1	1	1	1	
8	93210–14359	.O-RING	1	1	1	1	1	
9	93102–48012	.OIL SEAL	1	1	1	1	1	
10	93102–24034	.OIL SEAL	2	2	2	2	2	
11	4WV–46119–01	.SHIM, THRUST (0.1T)	1	1	1	1	1	UR
	4WV–46119–11	.SHIM, THRUST (0.2T)	1	1	1	1	1	UR
	4WV–46119–21	.SHIM, THRUST (0.3T)	1	1	1	1	1	UR
	4WV–46119–31	.SHIM, THRUST (0.4T)	1	1	1	1	1	UR
	4WV–46119–41	.SHIM, THRUST (0.5T)	1	1	1	1	1	UR
	4WV–46119–51	.SHIM, THRUST (1.0T)	1	1	1	1	1	UR
12	5KM–46155–00	.BOLT 1	1	1	1	1	1	
13	5KM–46470–12	.LIMITED SLIP DIFF. ASSY	1	1	1	1	1	
14	91317–08020	.BOLT	2	2	2	2	2	
15	90113–08004	.BOLT, SET	1	1	1	1	1	
16	4WV–46159–00	.BOLT 3	6	6	6	6	6	
17	5KM–46143–00	.RING,HOLE SNAP 2	2	2	2	2	2	
18	5KM–42752–00	.SHAFT	1	1	1	1	1	
19	5KM–4616A–01	.SERVO MOTOR COMP	1	1	1	1	1	
20	5KM–46441–00	.CLUTCH,DRIVEN	1	1	1	1	1	
21	5KM–18319–00	.SHAFT 2	1	1	1	1	1	
22	5KM–18514–00	.FORK, SHIFT 4	1	1	1	1	1	

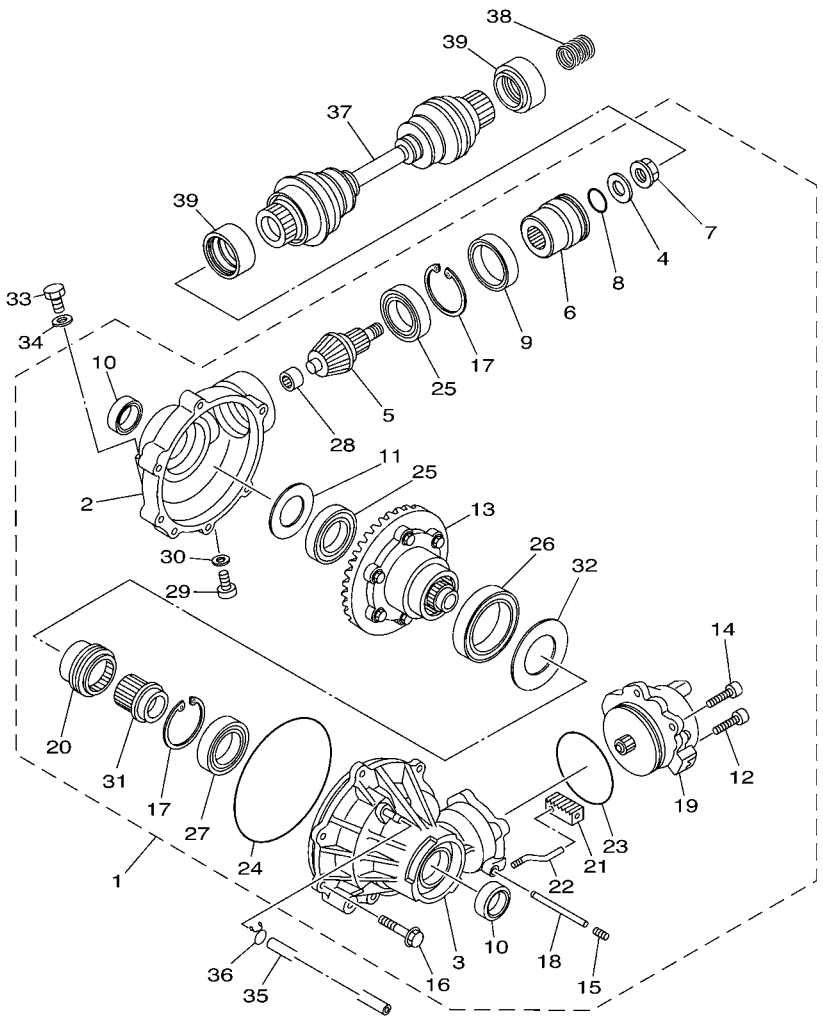

5KMU100-D271

FIG. 27 FRONT DIFFERENTIAL

REF. NO.	PART NO.	DESCRIPTION	USA	CAN	EUR	OCE	JPN	REMARKS
23	93210–82001	.O-RING	1	1	1	1	1	
24	93211–40040	.O-RING	1	1	1	1	1	
25	93306–00709	.BEARING	2	2	2	2	2	
26	93306–91201	.BEARING	1	1	1	1	1	
27	93316–00702	.BEARING	1	1	1	1	1	
28	4WV–46167–00	.BEARING 4	1	1	1	1	1	
29	90340–10001	.PLUG, STRAIGHT SCREW	1	1	1	1	1	
30	90430–10003	.GASKET	1	1	1	1	1	
31	5KM–46451–00	.ADAPTER	1	1	1	1	1	
32	5KM–46119–01	.SHIM, THRUST (0.1T)	1	1	1	1	1	UR
	5KM–46119–11	.SHIM, THRUST (0.2T)	1	1	1	1	1	UR
	5KM–46119–21	.SHIM, THRUST (0.3T)	1	1	1	1	1	UR
	5KM–46119–31	.SHIM, THRUST (0.4T)	1	1	1	1	1	UR
	5KM–46119–41	.SHIM, THRUST (0.5T)	1	1	1	1	1	UR
	5KM–46119–51	.SHIM, THRUST (1.0T)	1	1	1	1	1	UR
	5KM–46119–61	.SHIM, THRUST (1.5T)	1	1	1	1	1	UR
33	90340–14029	PLUG, STRAIGHT SCREW	1	1	1	1	1	
34	214–11198–01	GASKET	1	1	1	1	1	
35	90445–07371	HOSE (L700)	1	1	1	1	1	
36	90467–07029	CLIP	1	1	1	1	1	
37	5KM–46173–10	SHAFT, DRIVE 2	1	1	1	1	1	
38	90501–200A0	SPRING, COMPRESSION	1	1	1	1	1	
39	5KM–22358–00	SEAL 1	2	2	2	2	2	

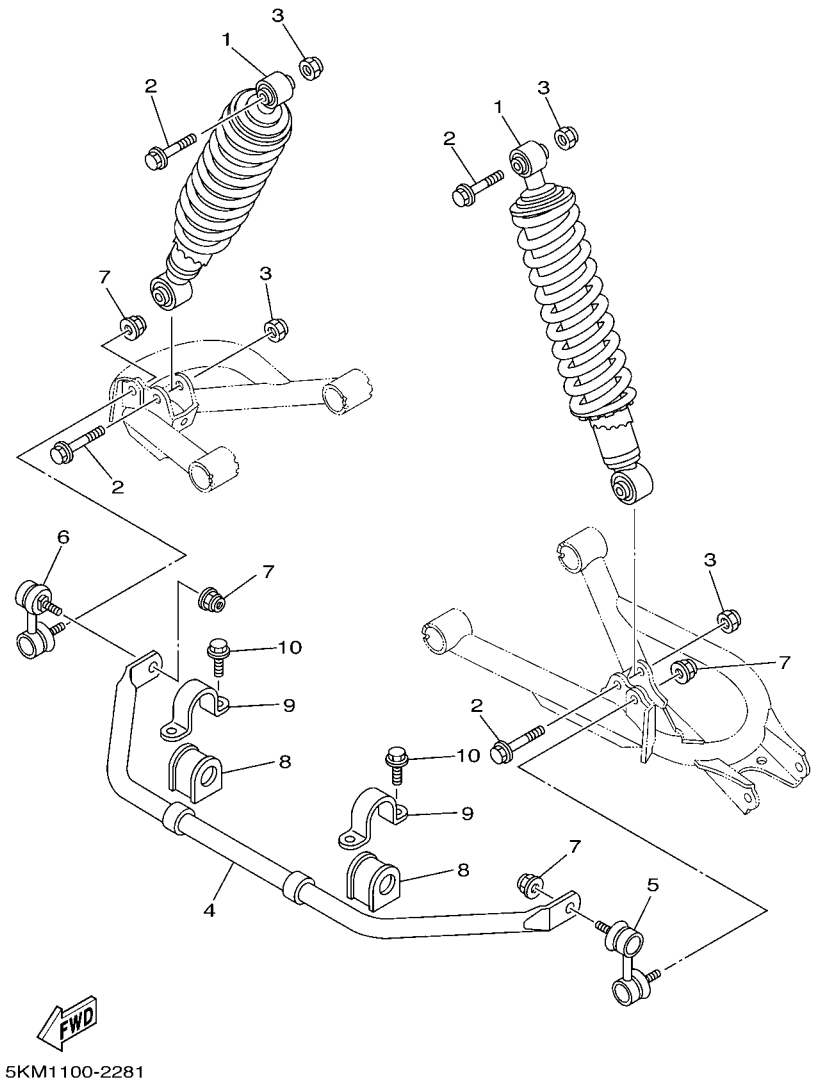

FIG. 28 REAR SUSPENSION

REF. NO.	PART NO.	DESCRIPTION	USA	CAN	EUR	OCE	JPN	REMARKS
1	5KM–22210–20	SHOCK ABSORBER ASSY, REAR	2	2			2	
	5KM–22210–30	SHOCK ABSORBER ASSY, REAR			2	2		
2	90105–10388	BOLT, FLANGE	4	4	4	4	4	
3	90185–10060	NUT, SELF-LOCKING	4	4	4	4	4	
4	5KM–47491–00	BAR, STABILIZER	1	1	1	1	1	
5	5KM–2385L–00	JOINT, STABILIZER 1	1	1	1	1	1	
6	5KM–2385M–00	JOINT, STABILIZER 2	1	1	1	1	1	
7	95607–10200	NUT, U FLANGE	4	4	4	4	4	
8	5KM–2386G–00	BUSH, STABILIZER FRONT	2	2	2	2	2	
9	5KM–2386H–00	COVER, STABILIZER FRONT	2	2	2	2	2	
10	95817–08014	BOLT, FLANGE	4	4	4	4	4	

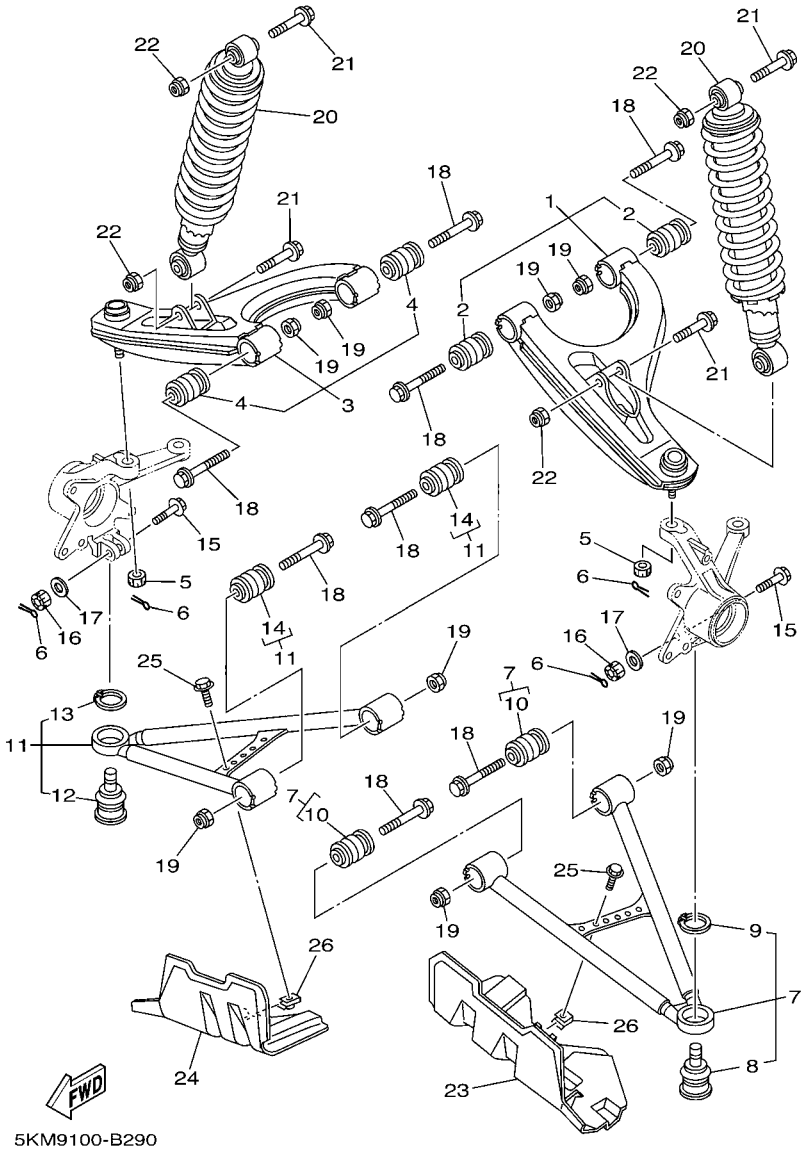

FIG. 29 FRONT SUSPENSION & WHEEL

REF. NO.	PART NO.	DESCRIPTION	USA	CAN	EUR	OCE	JPN	REMARKS
1	5KM–23540–10	FRONT UPPER ARM COMP. (LEFT)	1	1	1	1	1	
2	5KM–23526–10	.BUSH	2	2	2	2	2	
3	5KM–23550–10	FRONT UPPER ARM COMP. (RIGHT)	1	1	1	1	1	
4	5KM–23526–10	.BUSH	2	2	2	2	2	
5	90171–10046	NUT, CASTLE	2	2	2	2	2	
6	91401–20020	PIN, COTTER	4	4	4	4	4	
7	5KM–23570–10	FRONT LOWER ARM COMP. (LEFT)	1	1	1	1	1	
8	5KM–23579–00	.BALL JOINT 2	1	1	1	1	1	
9	99009–30400	.CIRCLIP	1	1	1	1	1	
10	5KM–23526–10	.BUSH	2	2	2	2	2	
11	5KM–23580–10	FRONT LOWER ARM COMP. (RIGHT)	1	1	1	1	1	
12	5KM–23579–00	.BALL JOINT 2	1	1	1	1	1	
13	99009–30400	.CIRCLIP	1	1	1	1	1	
14	5KM–23526–10	.BUSH	2	2	2	2	2	
15	90105–10549	BOLT, FLANGE	2	2	2	2	2	
16	95337–10600	NUT	2	2	2	2	2	
17	90201–10430	WASHER, PLATE	2	2	2	2	2	
18	90105–10286	BOLT, FLANGE	8	8	8	8	8	
19	90185–10060	NUT, SELF-LOCKING	8	8	8	8	8	
20	5KM–23350–20	SHOCK ABSORBER ASSY	2	2			2	
	5KM–23350–30	SHOCK ABSORBER ASSY			2	2		
21	90105–10388	BOLT, FLANGE	4	4	4	4	4	
22	90185–10060	NUT, SELF-LOCKING	4	4	4	4	4	
23	5KM–23123–00	COVER, LOWER 1	1	1	1	1	1	
24	5KM–23133–00	COVER, LOWER 2	1	1	1	1	1	
25	95807–06012	BOLT, FLANGE	2	2	2	2	2	
26	90183–06053	NUT, SPRING	2	2	2	2	2	

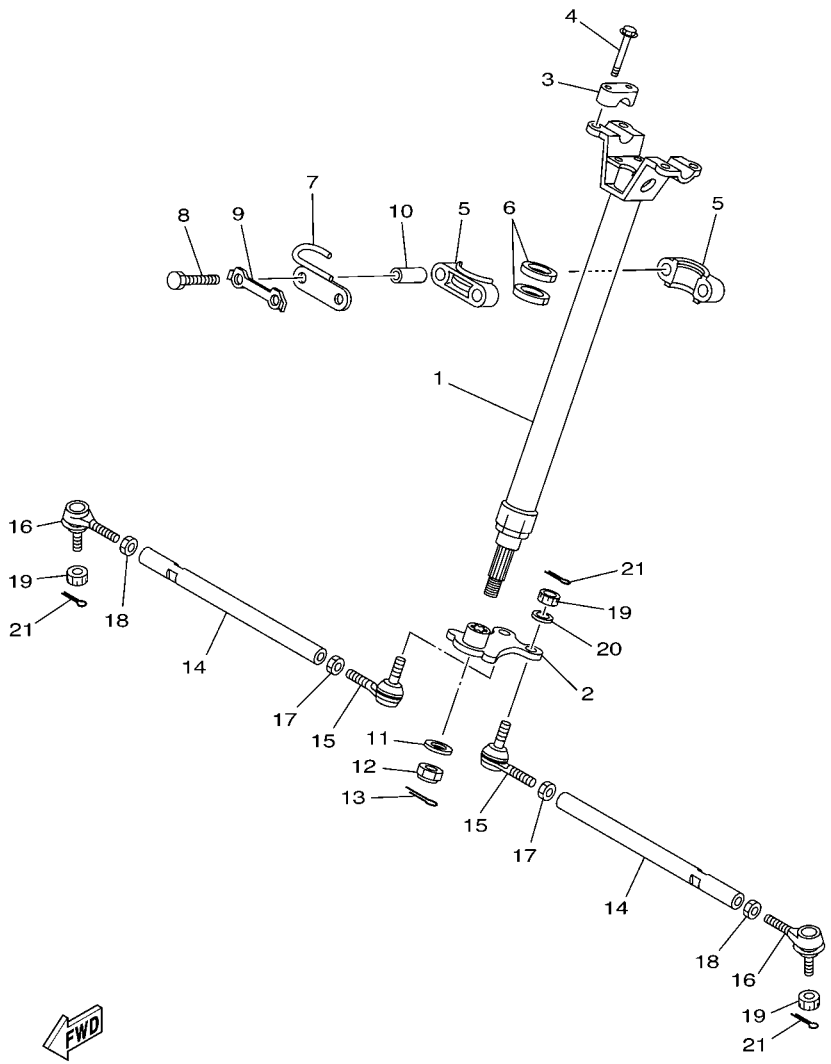

5KM1100-2300

FIG. 30 STEERING

REF. NO.	PART NO.	DESCRIPTION	USA	CAN	EUR	OCE	JPN	REMARKS
1	5KM–23813–00	COLUMN, STEERING 2	1	1	1	1	1	
2	5KM–23816–00	ARM, PITMAN	1	1	1	1	1	
3	8K1–23814–00	HOLDER, HANDLE	2	2	2	2	2	
4	95827–08030	BOLT, FLANGE	4	4	4	4	4	
5	1UY–23812–00	PLANE BEARING, STEERING	2	2	2	2	2	
6	93112–31011	OIL SEAL	2	2	2	2	2	
7	5KM–23868–00	BRACKET, STEERING LOWER	1	1	1	1	1	
8	97027–08060	BOLT	2	2	2	2	2	
9	1UY–23894–01	WASHER, LOCK 1	1	1	1	1	1	
10	90387–090R0	COLLAR	2	2	2	2	2	
11	90201–14226	WASHER, PLATE	1	1	1	1	1	
12	90185–14070	NUT, SELF-LOCKING	1	1	1	1	1	
13	90468–16191	CLIP	1	1	1	1	1	
14	5KM–23831–00	ROD, TIE	2	2	2	2	2	
15	1UY–23841–01	JOINT, UNIVERSAL 1	2	2	2	2	2	
16	1UY–23845–01	JOINT, UNIVERSAL 2	2	2	2	2	2	
17	95307–10700	NUT	2	2	2	2	2	
18	90170–10186	NUT	2	2	2	2	2	(L.H. THREAD)
19	90171–10046	NUT, CASTLE	4	4	4	4	4	
20	92990–10600	WASHER, PLATE	2	2	2	2	2	
21	91401–20020	PIN, COTTER	4	4	4	4	4	

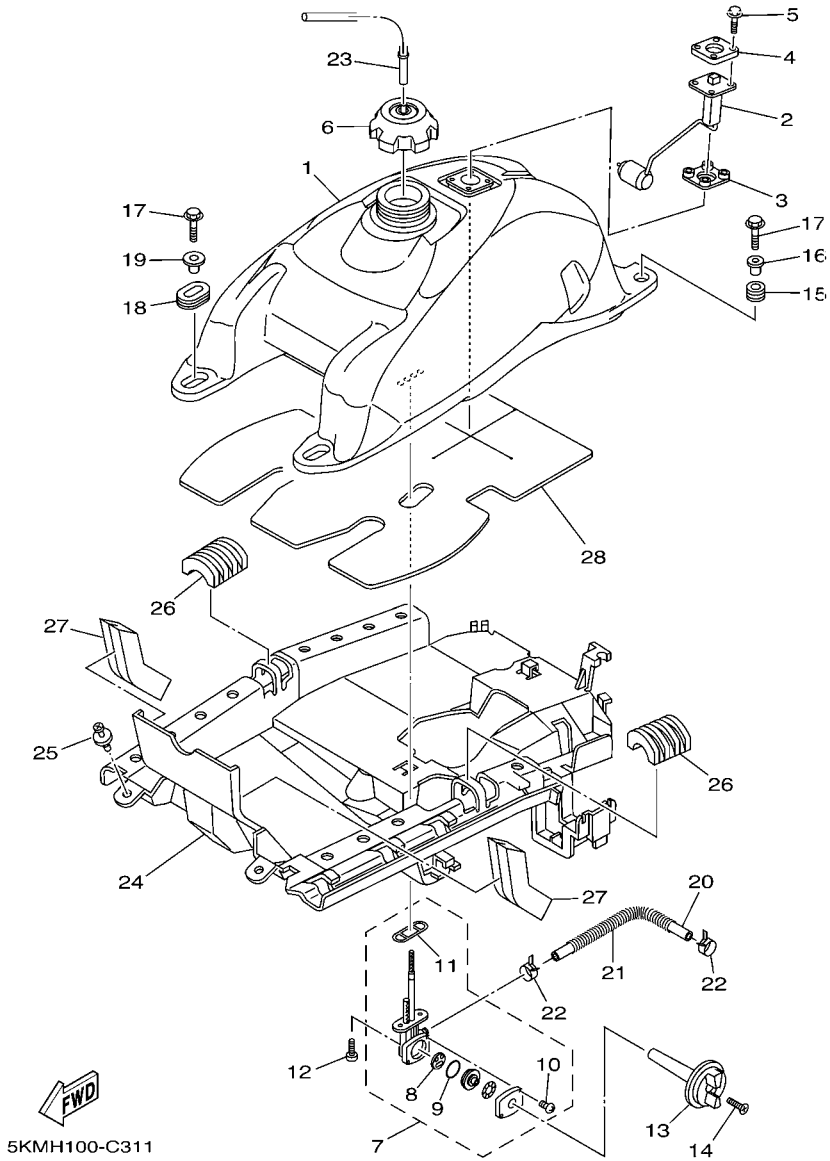

FIG. 31 FUEL TANK

REF. NO.	PART NO.	DESCRIPTION	USA	CAN	EUR	OCE	JPN	REMARKS
1	5KM–24110–00	FUEL TANK COMP.	1	1	1	1	1	
2	5KM–85752–00	SENDER UNIT ASSY, FUEL METER	1	1	1	1	1	
3	4US–85753–00	GASKET, SENDER UNIT	1	1	1	1	1	
4	2JG–85757–00	RETAINER	1	1	1	1	1	
5	90119–05071	BOLT, WITH WASHER	4	4	4	4	4	
6	5ND–24610–00	CAP ASSY	1	1	1	1	1	
7	5KM–24500–01	FUEL COCK ASSY 1	1	1	1	1	1	
8	3AC–24523–00	.VALVE PACKING	1	1	1	1	1	
9	3AJ–24534–01	.SEAL, COCK	1	1	1	1	1	
10	98507–03014	.SCREW, PAN HEAD	2	2	2	2	2	
11	4X8–24512–00	.O-RING	1	1	1	1	1	
12	90149–06011	SCREW	2	2	2	2	2	
13	5GH–24524–00	LEVER, COCK	1	1	1	1	1	
14	98707–04018	SCREW, FLAT HEAD	1	1	1	1	1	
15	90480–18290	GROMMET	2	2	2	2	2	
16	90387–066J1	COLLAR	2	2	2	2	2	
17	95807–06030	BOLT, FLANGE	4	4	4	4	4	
18	90480–01400	GROMMET	2	2	2	2	2	
19	90387–075H4	COLLAR	2	2	2	2	2	
20	5KM–24311–10	PIPE, FUEL 1	1	1	1	1	1	
21	5KM–24327–02	PROTECTOR, PIPE	1	1	1	1	1	
22	90467–12053	CLIP	2	2	2	2	2	
23	90445–09023	HOSE (L430)	1	1	1	1	1	
24	5KM–2414H–00	DAMPER, PLATE 1	1	1	1	1	1	
25	90269–07076	RIVET	2	2	2	2	2	
26	5KM–24181–00	DAMPER, LOCATING 1	2	2	2	2	2	
27	5KM–24182–00	DAMPER, LOCATING 2	2	2	2	2	2	

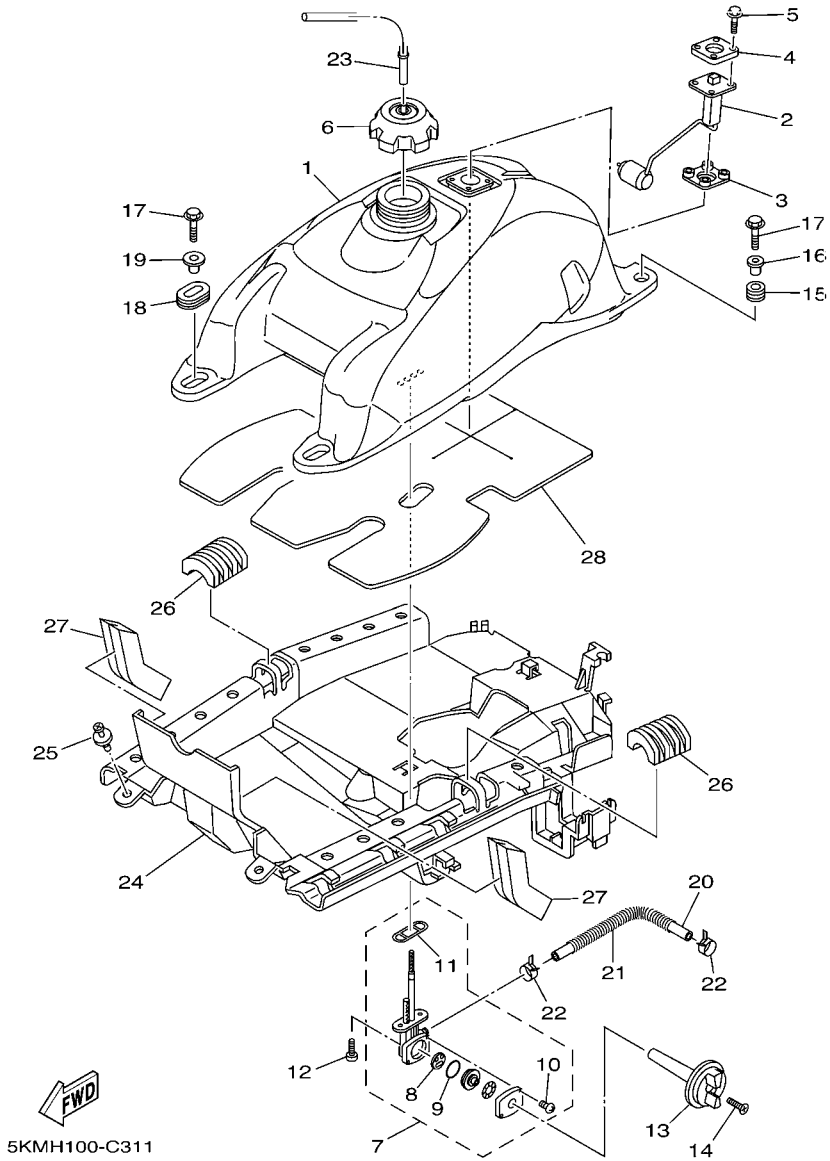

FIG. 31 FUEL TANK

REF. NO.	PART NO.	DESCRIPTION	USA	CAN	EUR	OCE	JPN	REMARKS
28	5KM–2416F–00	INSULATOR, FUEL TANK 1	1	1	1	1	1	

FIG. 32 SEAT

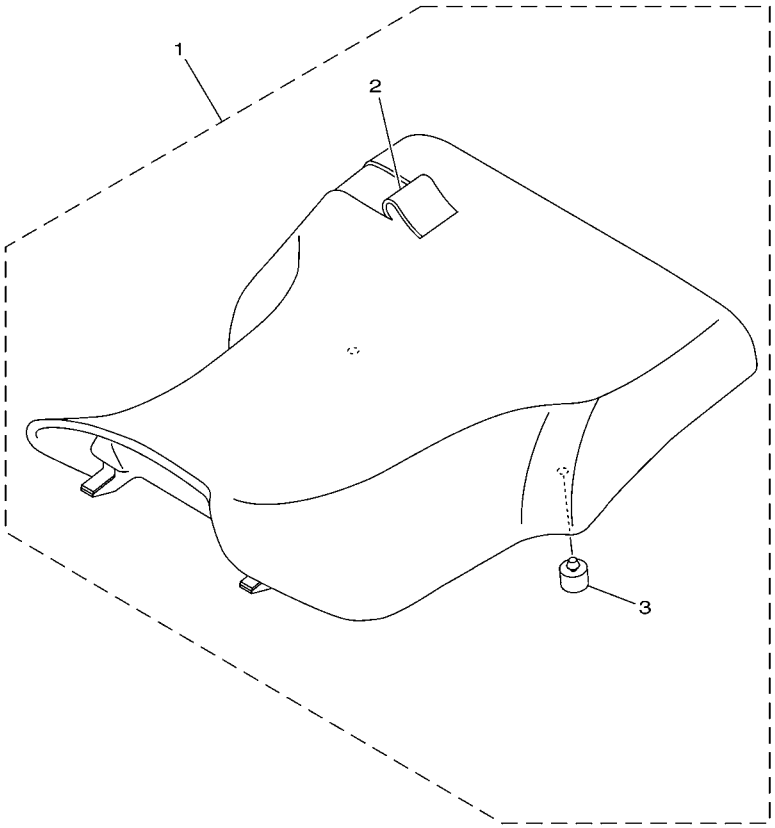

5KM1100-2320

REF. NO.	PART NO.	DESCRIPTION	USA	CAN	EUR	OCE	JPN	REMARKS
1	5KM–24710–00	SINGLE SEAT ASSY (YB)	1	1	1		1	FOR PDG,RTR,DPBSN
	5KM–24710–10	SINGLE SEAT ASSY (LGG)			1	1		FOR DPBSE
2	5KM–24731–00	.COVER, SEAT (YB)	1	1	1		1	FOR PDG,RTR,DPBSN
	5KM–24731–10	.COVER, SEAT (LGG)			1	1		FOR DPBSE
3	371–27114–00	.STOPPER, MAIN STAND	2	2	2	2	2	

FIG. 33 FRONT WHEEL

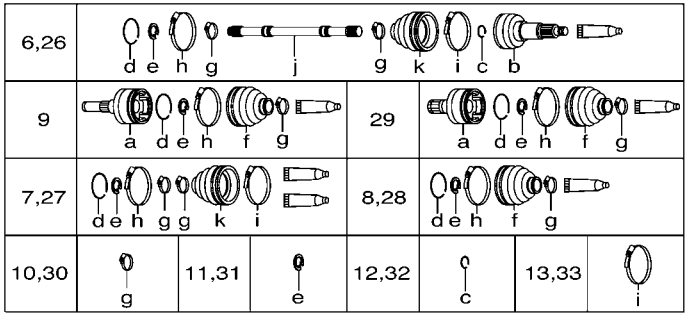

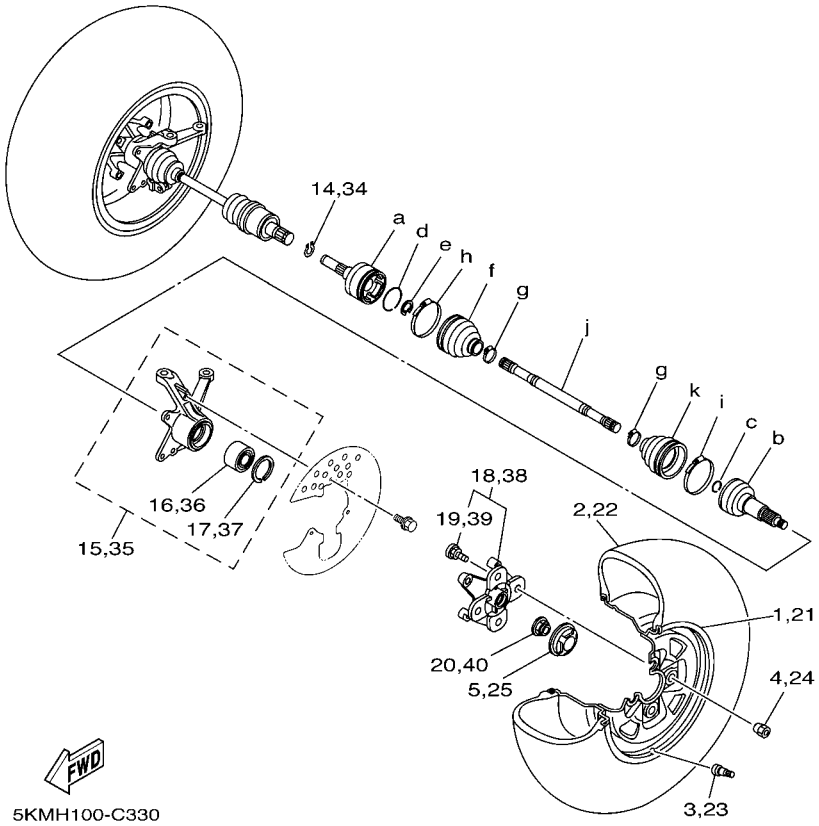

REF. NO.	PART NO.	DESCRIPTION	USA	CAN	EUR	OCE	JPN	REMARKS
1	5KM–25180–42	WHEEL COMP.	1	1	1	1	1	
2	94108–12009	TIRE (AT 25X8-12** KT131 T/L)	1	1	1		1	DUNLOP
	94108–12008	TIRE(AT25X8-12,C828 4P/TL)				1		CHENG SHIN
3	93900–00030	VALVE, RIM (TR412)	1	1	1	1	1	TAIHEIYO
4	90179–10007	NUT	4	4	4	4	4	
5	5KM–2512A–00	CAP, WHEEL	1	1	1	1	1	
6	5KM–2510F–11	BALL JOINT SET	1	1	1	1	1	
7	5KM–2510G–11	BOOT SET (BALL JOINT)	1	1	1	1	1	
8	5KM–2510H–10	BOOT SET (DOUBLE OFFSET JOINT)	1	1	1	1	1	
9	5KM–2510J–30	DOUBLE OFF SET JOINT	1	1	1	1	1	LH
10	3HN–2512G–01	BOOT BAND (SMALL)	2	2	2	2	2	
11	2HR–2512J–00	SNAP RING	1	1	1	1	1	
12	4KB–2512H–00	CIRCLIP	1	1	1	1	1	
13	3HN–2511G–01	BOOT BAND (BALL JOINT)	1	1	1	1	1	
14	5KM–45531–10	CLIP, DRIVE SHAFT	1	1	1	1	1	
15	5KM–23501–10	STEERING KNUCKLE ASSY (LEFT)	1	1	1	1	1	
16	93305–00601	.BEARING	1	1	1	1	1	
17	99009–55500	.CIRCLIP	1	1	1	1	1	
18	5KM–25111–10	HUB, FRONT	1	1	1	1	1	
19	90114–10010	.BOLT, SERRATION	4	4	4	4	4	
20	90179–20006	NUT	1	1	1	1	1	
21	5KM–25180–42	WHEEL COMP.	1	1	1	1	1	
22	94108–12009	TIRE (AT 25X8-12** KT131 T/L)	1	1	1		1	DUNLOP
	94108–12008	TIRE(AT25X8-12,C828 4P/TL)				1		CHENG SHIN
23	93900–00030	VALVE, RIM (TR412)	1	1	1	1	1	TAIHEIYO
24	90179–10007	NUT	4	4	4	4	4	
25	5KM–2512A–00	CAP, WHEEL	1	1	1	1	1	

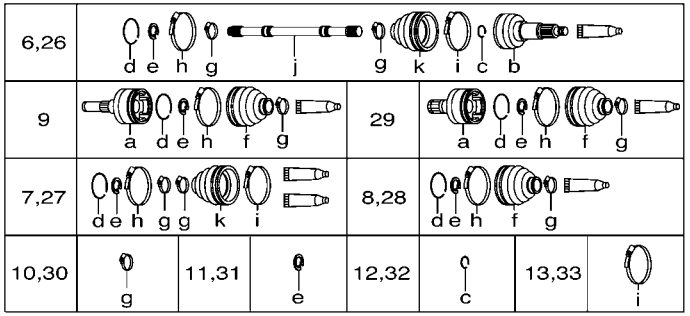

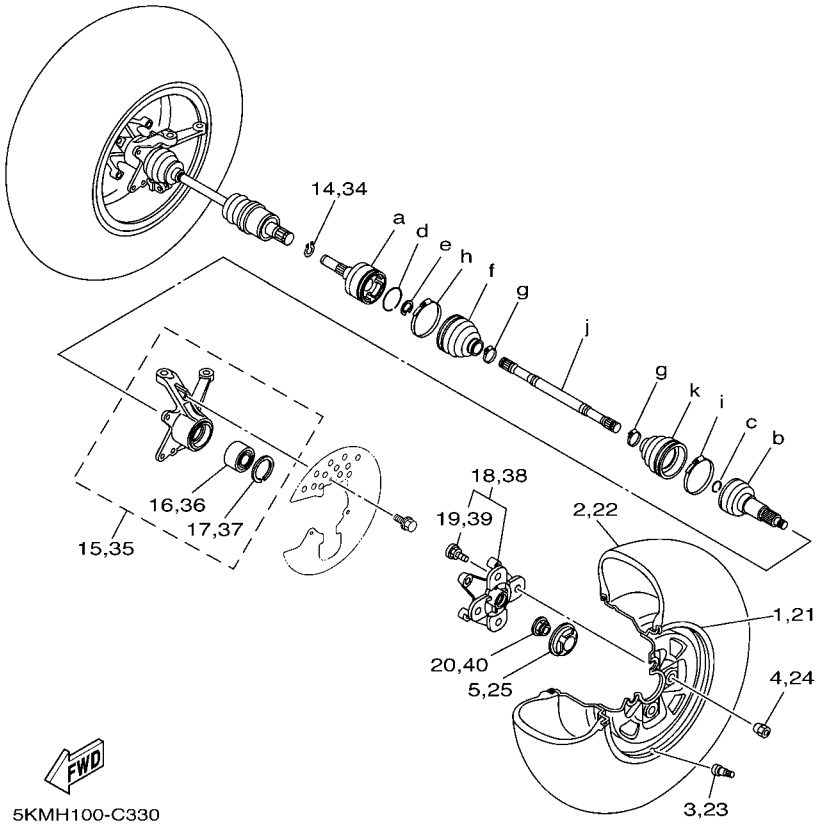

FIG. 33 FRONT WHEEL

REF. NO.	PART NO.	DESCRIPTION	USA	CAN	EUR	OCE	JPN	REMARKS
26	5KM–2510F–11	BALL JOINT SET	1	1	1	1	1	
27	5KM–2510G–11	BOOT SET (BALL JOINT)	1	1	1	1	1	
28	5KM–2510H–10	BOOT SET (DOUBLE OFFSET JOINT)	1	1	1	1	1	
29	5KM–2510J–20	DOUBLE OFF SET JOINT	1	1	1	1	1	RH
30	3HN–2512G–01	BOOT BAND (SMALL)	2	2	2	2	2	
31	2HR–2512J–00	SNAP RING	1	1	1	1	1	
32	4KB–2512H–00	CIRCLIP	1	1	1	1	1	
33	3HN–2511G–01	BOOT BAND (BALL JOINT)	1	1	1	1	1	
34	93450–22119	CIRCLIP	1	1	1	1	1	
35	5KM–23502–10	STEERING KNUCKLE ASSY (RIGHT)	1	1	1	1	1	
36	93305–00601	.BEARING	1	1	1	1	1	
37	99009–55500	.CIRCLIP	1	1	1	1	1	
38	5KM–25111–10	HUB, FRONT	1	1	1	1	1	
39	90114–10010	.BOLT, SERRATION	4	4	4	4	4	
40	90179–20006	NUT	1	1	1	1	1	

FIG. 34 FRONT BRAKE CALIPER

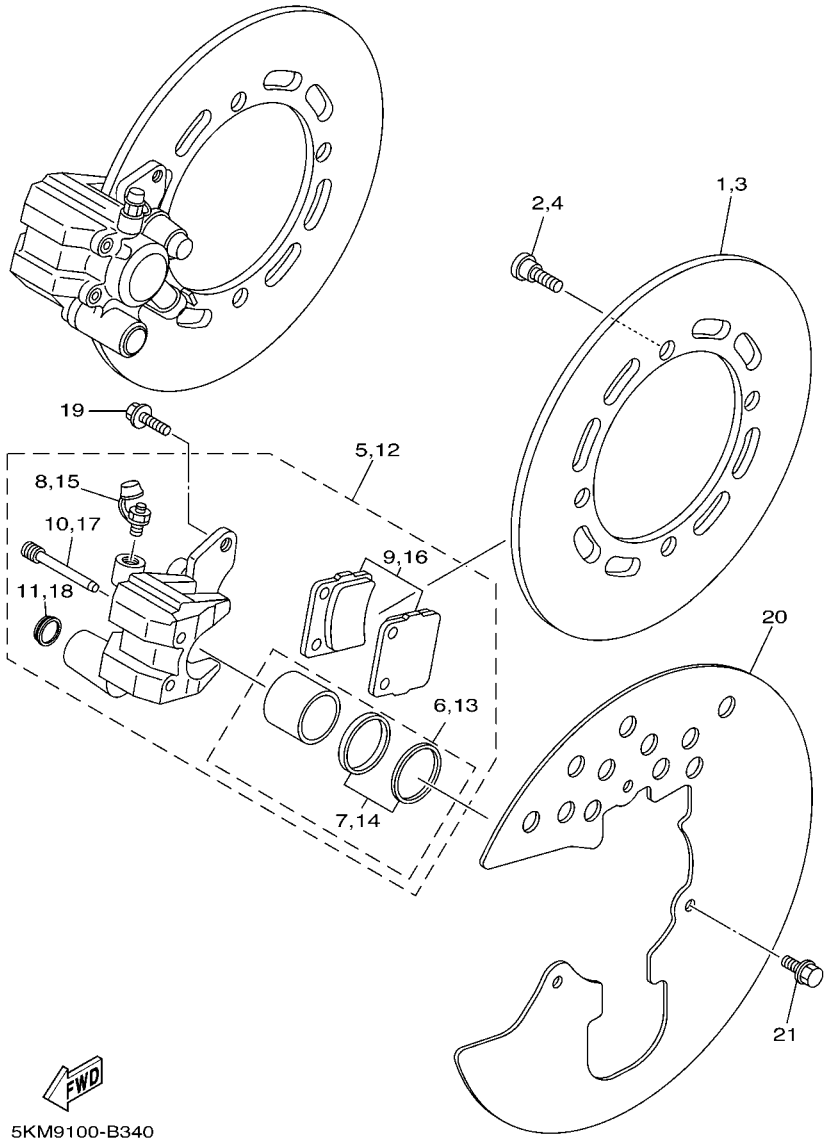

REF. NO.	PART NO.	DESCRIPTION	USA	CAN	EUR	OCE	JPN	REMARKS
1	5KM–2582T–10	DISC, BRAKE (LEFT)	1	1	1	1	1	
2	90109–08021	BOLT	4	4	4	4	4	
3	5KM–2582T–10	DISC, BRAKE (LEFT)	1	1	1	1	1	
4	90109–08021	BOLT	4	4	4	4	4	
5	4WV–2580T–10	CALIPER ASSY (LEFT)	1	1	1	1	1	
6	3GD–W0057–00	.PISTON ASSY, CALIPER	1	1	1	1	1	
7	3GD–W0047–00	..CALIPER SEAL KIT	1	1	1	1	1	
8	1UY–W0048–50	.BLEED SCREW KIT	1	1	1	1	1	
9	4WV–W0045–00	.BRAKE PAD KIT	1	1	1	1	1	
10	3GD–25933–00	.PIN, PAD	2	2	2	2	2	
11	3GD–25916–00	.PLUG	1	1	1	1	1	
12	4WV–2580U–10	CALIPER ASSY (RIGHT)	1	1	1	1	1	
13	3GD–W0057–00	.PISTON ASSY, CALIPER	1	1	1	1	1	
14	3GD–W0047–00	..CALIPER SEAL KIT	1	1	1	1	1	
15	1UY–W0048–50	.BLEED SCREW KIT	1	1	1	1	1	
16	4WV–W0045–00	.BRAKE PAD KIT	1	1	1	1	1	
17	3GD–25933–00	.PIN, PAD	2	2	2	2	2	
18	3GD–25916–00	.PLUG	1	1	1	1	1	
19	90105–08538	BOLT, FLANGE	4	4	4	4	4	
20	5KM–2514A–10	RING, WHEEL 1 (LEFT)	2	2	2	2	2	
21	90150–06021	SCREW, ROUND HEAD	6	6	6	6	6	

FIG. 35 REAR WHEEL

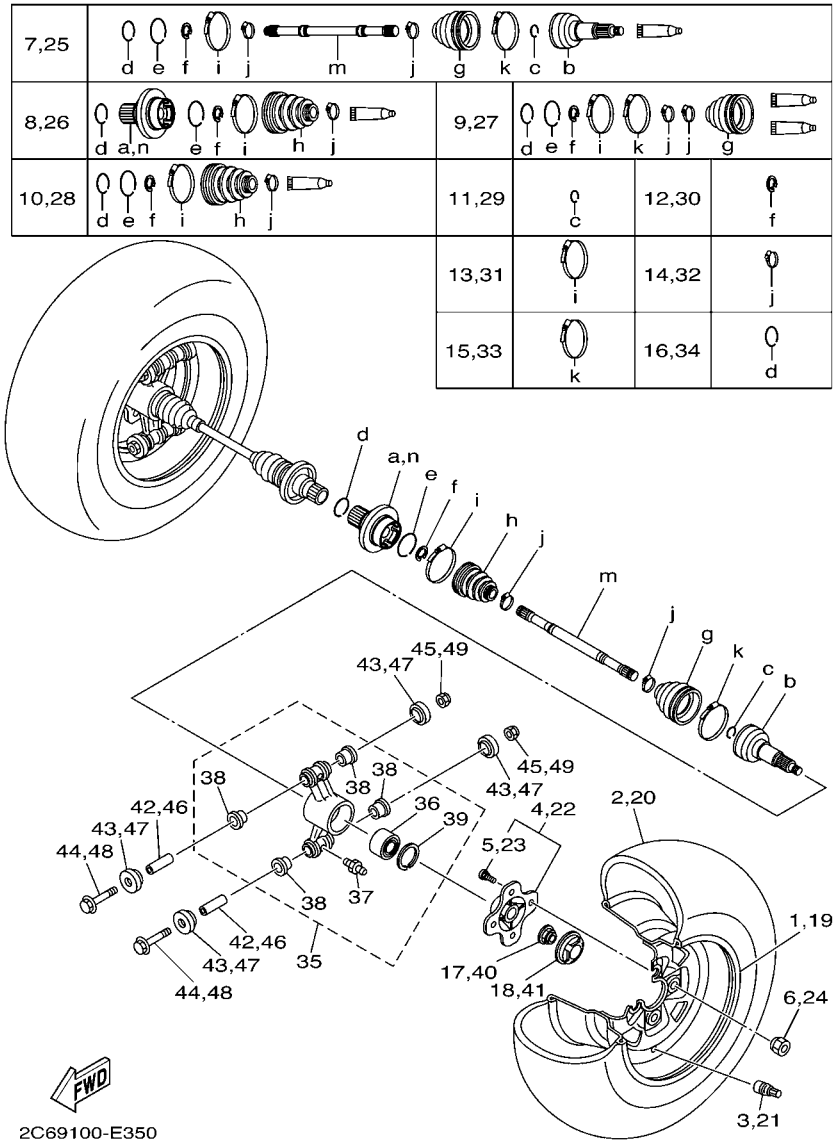

REF. NO.	PART NO.	DESCRIPTION	USA	CAN	EUR	OCE	JPN	REMARKS
1	5KM–25390–42	REAR WHEEL COMP.	1	1	1	1	1	
2	94110–12009	TIRE (AT 25X10-12** KT135 T/L)	1	1	1		1	DUNLOP
	94110–12008	TIRE(AT25X10-12,C828 4P/TL)				1		CHENG SHIN
3	93900–00030	VALVE, RIM (TR412)	1	1	1	1	1	TAIHEIYO
4	5KM–25311–10	HUB, REAR	1	1	1	1	1	
5	90114–10010	.BOLT, SERRATION	4	4	4	4	4	
6	90179–10007	NUT	4	4	4	4	4	
7	5KM–2530U–13	BALL JOINT SET	1	1	1	1	1	LH
8	5KM–2530W–11	DOUBLE OFF SET JOINT	1	1	1	1	1	LH
9	5KM–2530X–12	BOOT SET (BALL JOINT)	1	1	1	1	1	
10	5KM–2530Y–11	BOOT SET (DOUBLE OFFSET JOINT)	1	1	1	1	1	
11	4KB–2512H–00	CIRCLIP	1	1	1	1	1	
12	2HR–2512J–00	SNAP RING	1	1	1	1	1	
13	4KB–2511H–00	BOOT BAND(DOUBLE OFFSET JOINT)	1	1	1	1	1	
14	3HN–2512G–01	BOOT BAND (SMALL)	2	2	2	2	2	
15	3HN–2511G–01	BOOT BAND (BALL JOINT)	1	1	1	1	1	
16	5KM–2536E–10	CLIP, SPRING	1	1	1	1	1	
17	90179–20006	NUT	1	1	1	1	1	
18	5KM–2512A–00	CAP, WHEEL	1	1	1	1	1	
19	5KM–25390–42	REAR WHEEL COMP.	1	1	1	1	1	
20	94110–12009	TIRE (AT 25X10-12** KT135 T/L)	1	1	1		1	DUNLOP
	94110–12008	TIRE(AT25X10-12,C828 4P/TL)				1		CHENG SHIN
21	93900–00030	VALVE, RIM (TR412)	1	1	1	1	1	TAIHEIYO
22	5KM–25311–10	HUB, REAR	1	1	1	1	1	
23	90114–10010	.BOLT, SERRATION	4	4	4	4	4	
24	90179–10007	NUT	4	4	4	4	4	
25	5KM–2530T–13	BALL JOINT SET	1	1	1	1	1	RH

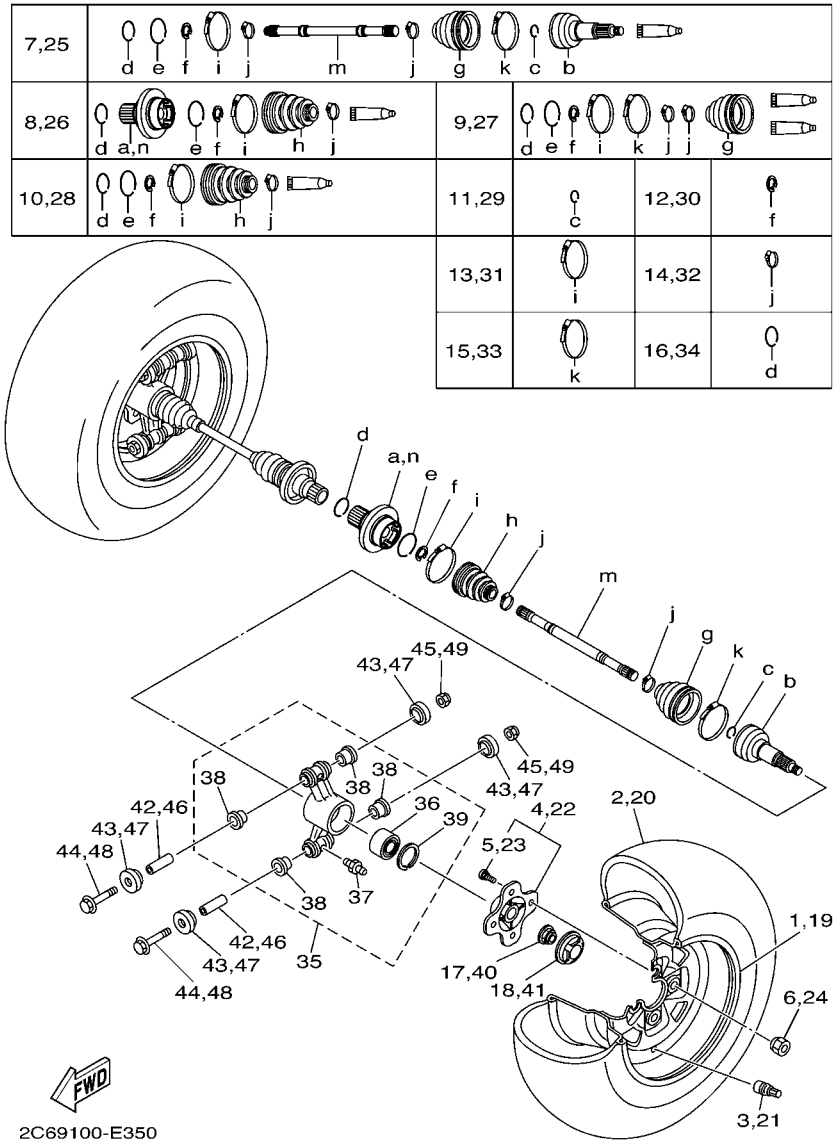

FIG. 35 REAR WHEEL

REF. NO.	PART NO.	DESCRIPTION	USA	CAN	EUR	OCE	JPN	REMARKS
26	5KM–2530V–11	DOUBLE OFF SET JOINT	1	1	1	1	1	RH
27	5KM–2530X–12	BOOT SET (BALL JOINT)	1	1	1	1	1	
28	5KM–2530Y–11	BOOT SET (DOUBLE OFFSET JOINT)	1	1	1	1	1	
29	4KB–2512H–00	CIRCLIP	1	1	1	1	1	
30	2HR–2512J–00	SNAP RING	1	1	1	1	1	
31	4KB–2511H–00	BOOT BAND(DOUBLE OFFSET JOINT)	1	1	1	1	1	
32	3HN–2512G–01	BOOT BAND (SMALL)	2	2	2	2	2	
33	3HN–2511G–01	BOOT BAND (BALL JOINT)	1	1	1	1	1	
34	5KM–2536E–10	CLIP, SPRING	1	1	1	1	1	
35	5KM–2530F–10	REAR KNUCKLE ASSY	2	2	2	2	2	
36	93305–00601	.BEARING	1	1	1	1	1	
37	93700–06004	.NIPPLE, GREASE	2	2	2	2	2	
38	90381–17067	.BUSH, SOLID	4	4	4	4	4	
39	99009–55500	.CIRCLIP	1	1	1	1	1	
40	90179–20006	NUT	1	1	1	1	1	
41	5KM–2512A–00	CAP, WHEEL	1	1	1	1	1	
42	5KM–23448–00	SPACER	2	2	2	2	2	
43	2NL–23517–00	COVER, THRUST 1	4	4	4	4	4	
44	90105–10480	BOLT, FLANGE	2	2	2	2	2	
45	90185–10060	NUT, SELF-LOCKING	2	2	2	2	2	
46	5KM–23448–00	SPACER	2	2	2	2	2	
47	2NL–23517–00	COVER, THRUST 1	4	4	4	4	4	
48	90105–10480	BOLT, FLANGE	2	2	2	2	2	
49	90185–10060	NUT, SELF-LOCKING	2	2	2	2	2	

FIG. 36 REAR BRAKE CALIPER

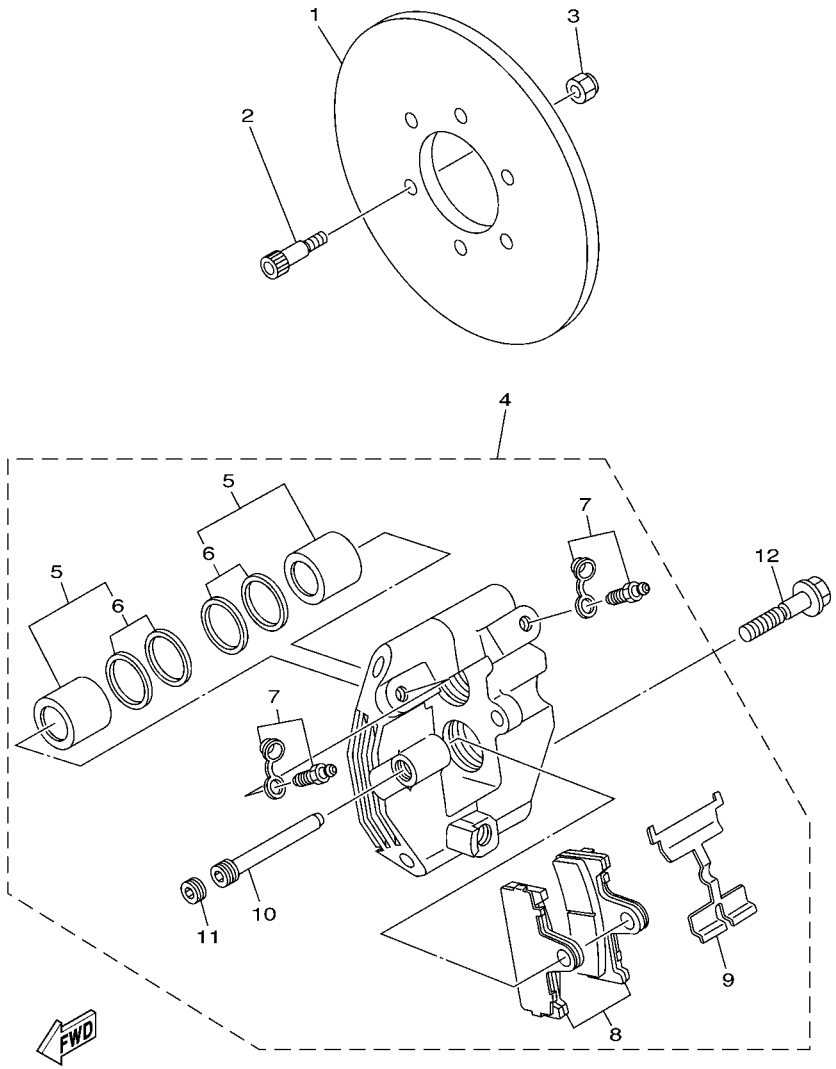

5KM9100-B360

REF. NO.	PART NO.	DESCRIPTION	USA	CAN	EUR	OCE	JPN	REMARKS
1	5KM–2582V–00	DISC, REAR BRAKE 1	1	1	1	1	1	
2	90109–06038	BOLT	6	6	6	6	6	
3	95617–06100	NUT, U	6	6	6	6	6	
4	5KM–2580V–01	CALIPER ASSY, REAR 1	1	1	1	1	1	
5	5KM–W0057–00	.PISTON ASSY, CALIPER	4	4	4	4	4	
6	5KM–W0047–00	..CALIPER SEAL KIT	1	1	1	1	1	
7	1UY–W0048–50	.BLEED SCREW KIT	2	2	2	2	2	
8	5KM–W0046–01	.BRAKE PAD KIT 2	1	1	1	1	1	
9	5KM–25919–00	.SUPPORT, PAD	1	1	1	1	1	
10	8CR–25924–00	.PIN, PAD	1	1	1	1	1	
11	8CR–25926–00	.BOLT	1	1	1	1	1	
12	90105–10634	BOLT, FLANGE	2	2	2	2	2	

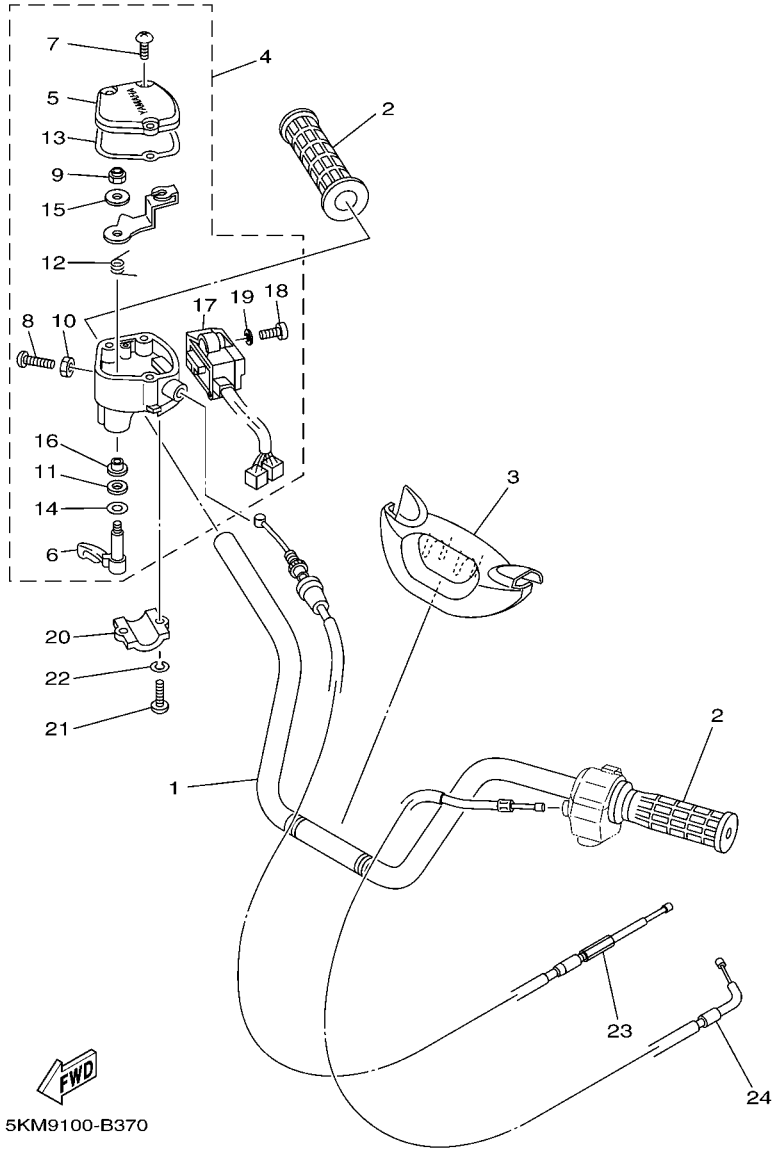

FIG. 37 STEERING HANDLE & CABLE

REF. NO.	PART NO.	DESCRIPTION	USA	CAN	EUR	OCE	JPN	REMARKS
1	5KM–26111–00	HANDLEBAR	1	1	1	1	1	
2	5LP–26241–00	GRIP	2	2	2	2	2	
3	5KM–26124–00	PROTECTOR, HANDLEBAR	1	1	1	1	1	
4	5KM–26250–00	THROTTLE LEVER ASSY	1	1	1	1	1	
5	4KB–2628F–10	.CAP, GEAR	1	1	1	1	1	
6	1NV–2625G–01	.LEVER, THROTTLE	1	1	1	1	1	
7	90149–04278	.SCREW	3	3	3	3	3	
8	98507–05020	.SCREW, PAN HEAD	1	1	1	1	1	
9	95607–05100	.NUT, U	1	1	1	1	1	
10	95307–05700	.NUT	1	1	1	1	1	
11	93104–09025	.OIL SEAL	1	1	1	1	1	
12	1NV–26304–00	.SPRING	1	1	1	1	1	
13	4KB–2628G–00	.GASKET	1	1	1	1	1	
14	1NV–26129–00	.WASHER	1	1	1	1	1	
15	1NV–26398–00	.WASHER	1	1	1	1	1	
16	1NV–2625K–00	.COLLAR	1	1	1	1	1	
17	5KM–83976–00	.SWITCH, HANDLE 1	1	1	1	1	1	
18	98507–04016	.SCREW, PAN HEAD	2	2	2	2	2	
19	92907–04600	.WASHER	2	2	2	2	2	
20	4V4–82913–00	HOLDER, LEVER LOWER 1	1	1	1	1	1	
21	98507–05020	SCREW, PAN HEAD	2	2	2	2	2	
22	92907–05100	WASHER, SPRING	2	2	2	2	2	
23	5KM–26311–10	CABLE, THROTTLE 1	1	1	1	1	1	
24	5KM–26331–10	CABLE, STARTER 1	1	1	1	1	1	

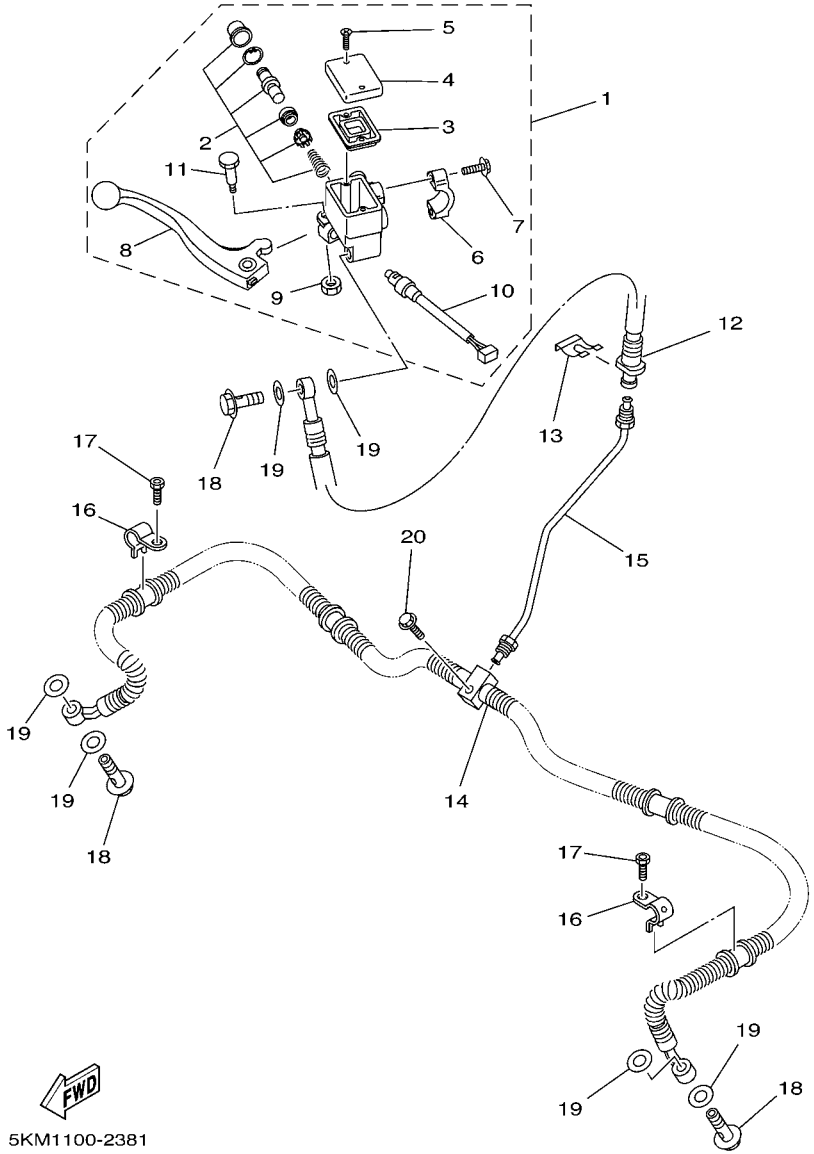

FIG. 38 FRONT MASTER CYLINDER

REF. NO.	PART NO.	DESCRIPTION	USA	CAN	EUR	OCE	JPN	REMARKS
1	5KM–2583T–01	MASTER CYLINDER ASSY	1	1	1	1	1	
2	8CR–W0041–00	.CYLINDER KIT, MASTER	1	1	1	1	1	
3	4L0–25854–00	.DIAPHRAGM, RESERVOIR	1	1	1	1	1	
4	5JX–25852–01	.CAP, RESERVOIR	1	1	1	1	1	
5	98706–04012	.SCREW, FLAT HEAD	2	2	2	2	2	
6	5GH–25867–00	.BRACKET, MASTER CYLINDER	1	1	1	1	1	
7	5EB–26332–00	.BOLT	2	2	2	2	2	
8	5KM–83922–00	.LEVER 2	1	1	1	1	1	
9	95606–06100	.NUT, U	1	1	1	1	1	
10	5LP–83980–00	.FRONT STOP SWITCH ASSY	1	1	1	1	1	
11	1FK–2589F–00	.BOLT, LEVER	1	1	1	1	1	
12	5KM–25872–00	HOSE, BRAKE 1	1	1	1	1	1	
13	2GU–25866–00	CIRCLIP	1	1	1	1	1	
14	5KM–25873–10	HOSE, BRAKE 2	1	1	1	1	1	
15	5KM–25871–00	PIPE, BRAKE	1	1	1	1	1	
16	5KM–25875–00	HOLDER, BRAKE HOSE 1	2	2	2	2	2	
17	91317–06010	BOLT	2	2	2	2	2	
18	90401–10159	BOLT, UNION	3	3	3	3	3	
19	90201–10118	WASHER, PLATE	6	6	6	6	6	
20	95827–06025	BOLT, FLANGE	1	1	1	1	1	

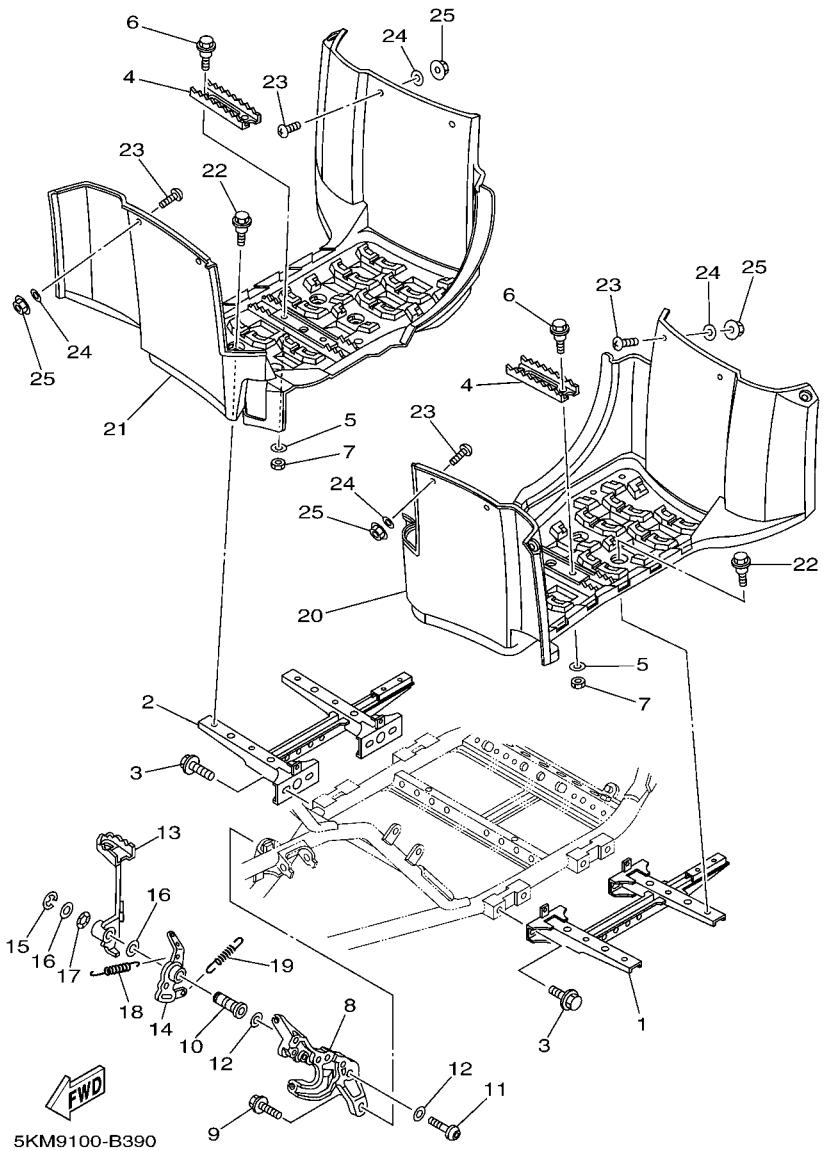

FIG. 39 STAND & FOOTREST

REF. NO.	PART NO.	DESCRIPTION	USA	CAN	EUR	OCE	JPN	REMARKS
1	5KM–27481–10	BOARD, FOOTREST	1	1	1	1	1	
2	5KM–27488–10	BOARD, FOOTREST 2	1	1	1	1	1	
3	95817–08012	BOLT, FLANGE	8	8	8	8	8	
4	5GH–2741A–00	ARM 1	2	2	2	2	2	
5	90201–06071	WASHER, PLATE	4	4	4	4	4	
6	90109–063F5	BOLT	4	4	4	4	4	
7	95317–06600	NUT	4	4	4	4	4	
8	5KM–27263–00	BRACKET 1	1	1	1	1	1	
9	95817–08025	BOLT, FLANGE	2	2	2	2	2	
10	5KM–27212–10	SHAFT, BRAKE PEDAL	1	1	1	1	1	
11	90149–08296	SCREW	1	1	1	1	1	
12	90201–08784	WASHER, PLATE	2	2	2	2	2	
13	5KM–27211–00	PEDAL, BRAKE	1	1	1	1	1	
14	5KM–27252–00	LEVER, BRAKE PEDAL	1	1	1	1	1	
15	99001–10600	CIRCLIP	1	1	1	1	1	
16	90201–144J2	WASHER, PLATE	2	2	2	2	2	
17	90206–14086	WASHER, WAVE	1	1	1	1	1	
18	90506–16318	SPRING, TENSION	1	1	1	1	1	
19	90506–12441	SPRING, TENSION	1	1	1	1	1	
20	5KM–27453–01	COVER 1	1	1	1	1	1	
21	5KM–27463–01	COVER 2	1	1	1	1	1	
22	90109–063F1	BOLT	8	8	8	8	8	
23	90149–06021	SCREW	12	12	12	12	12	
24	90201–06557	WASHER, PLATE	12	12	12	12	12	
25	95707–06300	NUT, FLANGE	12	12	12	12	12	

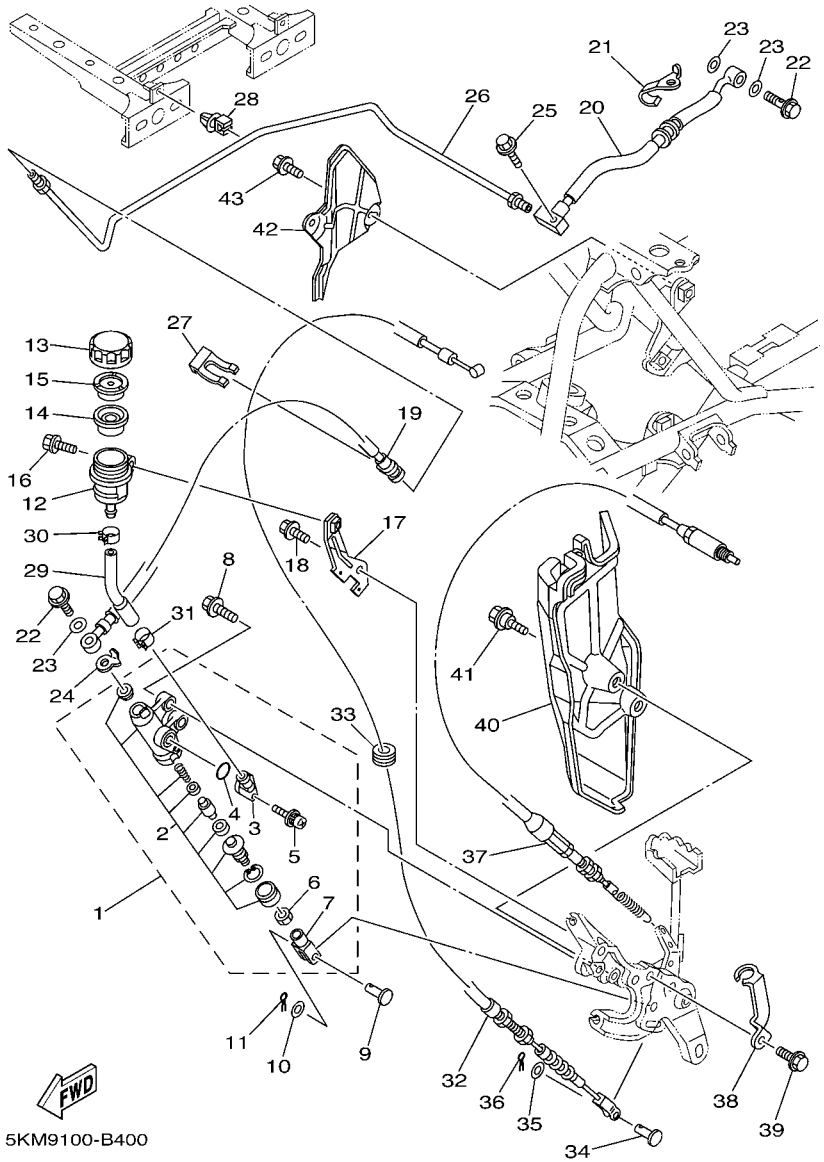

FIG. 40 REAR MASTER CYLINDER

REF. NO.	PART NO.	DESCRIPTION	USA	CAN	EUR	OCE	JPN	REMARKS
1	5KM–2583V–00	RR. MASTER CYLINDER ASSY.	1	1	1	1	1	
2	5KM–W0042–50	.CYLINDER KIT, MASTER	1	1	1	1	1	
3	31A–2582A–50	.JOINT	1	1	1	1	1	
4	93210–15620	.O-RING	1	1	1	1	1	
5	3GM–2589H–00	.SCREW	1	1	1	1	1	
6	4SS–27218–00	.NUT	2	2	2	2	2	
7	2YK–27222–00	.JOINT	1	1	1	1	1	
8	95817–08025	BOLT, FLANGE	2	2	2	2	2	
9	90240–08013	PIN, CLEVIS	1	1	1	1	1	
10	90201–08083	WASHER, PLATE	1	1	1	1	1	
11	91401–16012	PIN, COTTER	1	1	1	1	1	
12	5JJ–25894–00	TANK, RESERVOIR	1	1	1	1	1	
13	3XP–25852–50	CAP, RESERVOIR	1	1	1	1	1	
14	2VN–25854–00	DIAPHRAGM, RESERVOIR	1	1	1	1	1	
15	2VN–25855–00	BUSH,DIAPHRAGM	1	1	1	1	1	
16	95827–06012	BOLT, FLANGE	1	1	1	1	1	
17	5KM–2133G–10	BRACKET, RESERVER	1	1	1	1	1	
18	95827–06008	BOLT, FLANGE	1	1	1	1	1	
19	5KM–25874–00	HOSE, BRAKE	1	1	1	1	1	
20	5KM–2581J–10	HOSE, BRAKE 4	1	1	1	1	1	
21	5KM–25886–00	HOLDER, BRAKE HOSE	1	1	1	1	1	
22	90401–10159	BOLT, UNION	2	2	2	2	2	
23	90201–10118	WASHER, PLATE	3	3	3	3	3	
24	5GH–25844–00	WASHER, LOCK	1	1	1	1	1	
25	95827–06025	BOLT, FLANGE	1	1	1	1	1	
26	5KM–25882–00	PIPE, BRAKE 2	1	1	1	1	1	
27	2GU–25866–00	CIRCLIP	1	1	1	1	1	

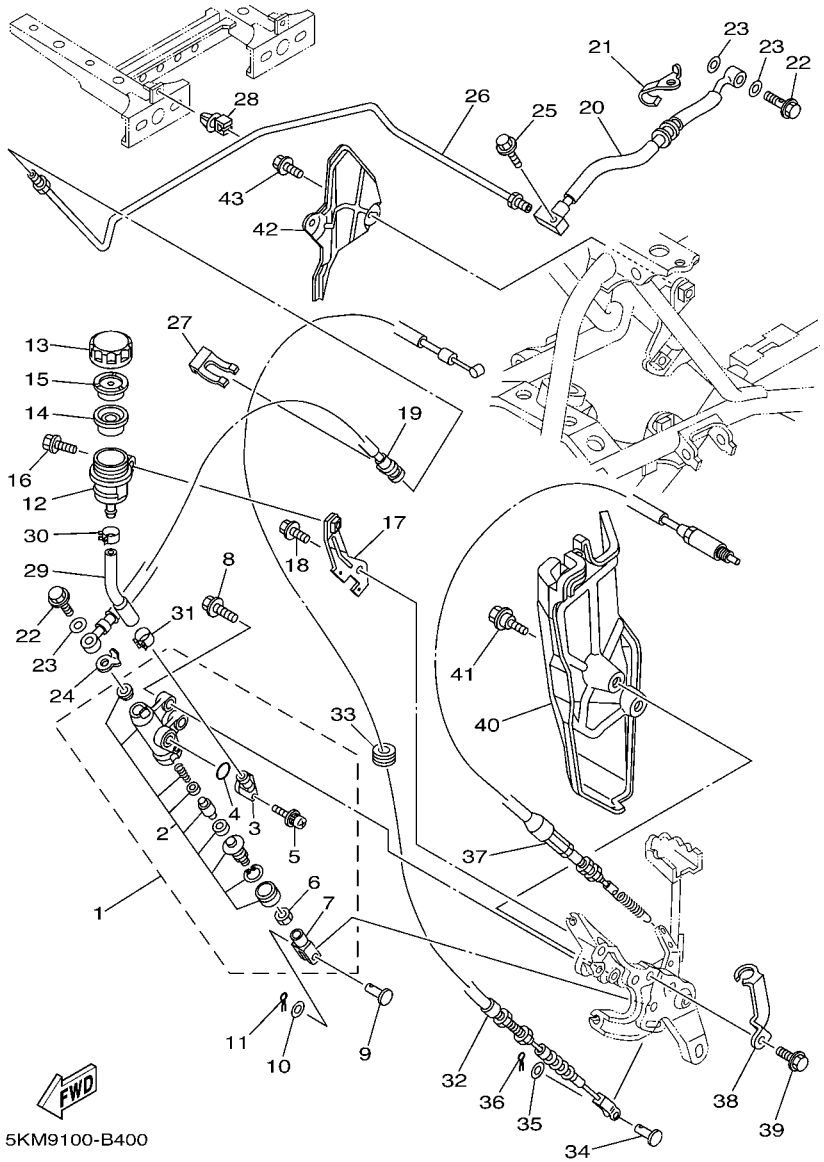

FIG. 40 REAR MASTER CYLINDER

REF. NO.	PART NO.	DESCRIPTION	USA	CAN	EUR	OCE	JPN	REMARKS
28	5KM–81677–00	CLAMP 1	3	3	3	3	3	
29	5LP–25895–00	HOSE, RESERVOIR	1	1	1	1	1	
30	90467–11044	CLIP	1	1	1	1	1	
31	90467–14057	CLIP	1	1	1	1	1	
32	5KM–26341–00	CABLE, BRAKE	1	1	1	1	1	
33	90480–18418	GROMMET	1	1	1	1	1	
34	90240–06076	PIN, CLEVIS	1	1	1	1	1	
35	90201–06042	WASHER, PLATE	1	1	1	1	1	
36	91401–20012	PIN, COTTER	1	1	1	1	1	
37	5KM–2637F–00	CABLE, CONTROL 2	1	1	1	1	1	
38	5KM–21441–00	BRACKET, STOP SWITCH	1	1	1	1	1	
39	95827–06008	BOLT, FLANGE	1	1	1	1	1	
40	5KM–27491–00	PROTECTOR	1	1	1	1	1	
41	90109–063F1	BOLT	2	2	2	2	2	
42	5KM–2117G–10	PROTECTOR	1	1	1	1	1	
43	95827–06008	BOLT, FLANGE	2	2	2	2	2	

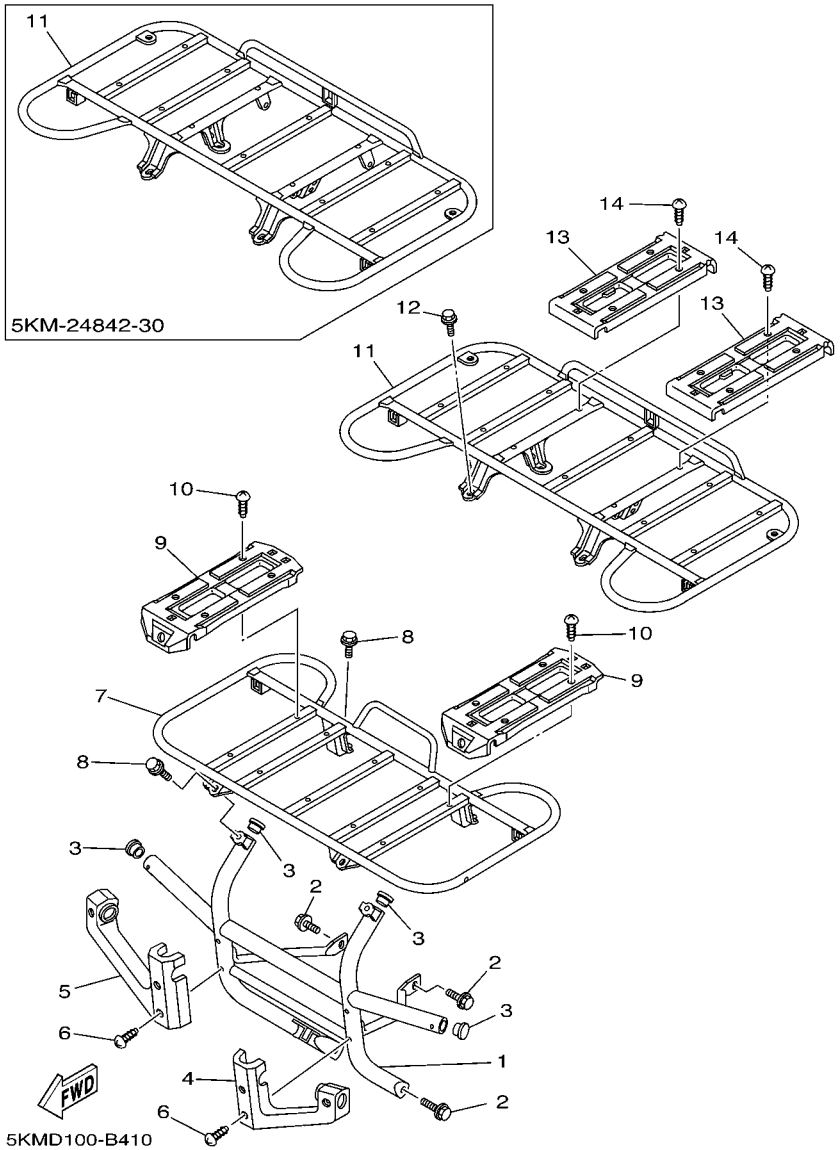

FIG. 41 GUARD

REF. NO.	PART NO.	DESCRIPTION	USA	CAN	EUR	OCE	JPN	REMARKS
1	5KM–2845N–00	BAR, CARRY FRONT	1	1	1	1	1	
2	95827–08012	BOLT, FLANGE	4	4	4	4	4	
3	5KM–2482H–00	CAP	4	4	4	4	4	
4	5KM–2842M–00	COVER 1	1	1	1	1	1	
5	5KM–2842N–00	COVER 2	1	1	1	1	1	
6	90167–05025	SCREW, TAPPING	6	6	6	6	6	
7	5KM–24841–10	CARRIER, FRONT	1	1	1	1	1	
8	95827–08012	BOLT, FLANGE	4	4	4	4	4	
9	5KM–24845–00	COVER 1	2	2	2	2	2	
10	97707–50016	SCREW, TAPPING	8	8	8	8	8	
11	5KM–24842–20	CARRIER, REAR	1		1	1	1	
	5KM–24842–30	CARRIER, REAR		1				
12	95827–08014	BOLT, FLANGE	4	4	4	4	4	
13	5KM–24846–00	COVER 2	2	2	2	2	2	
14	97707–50016	SCREW, TAPPING	8	8	8	8	8	

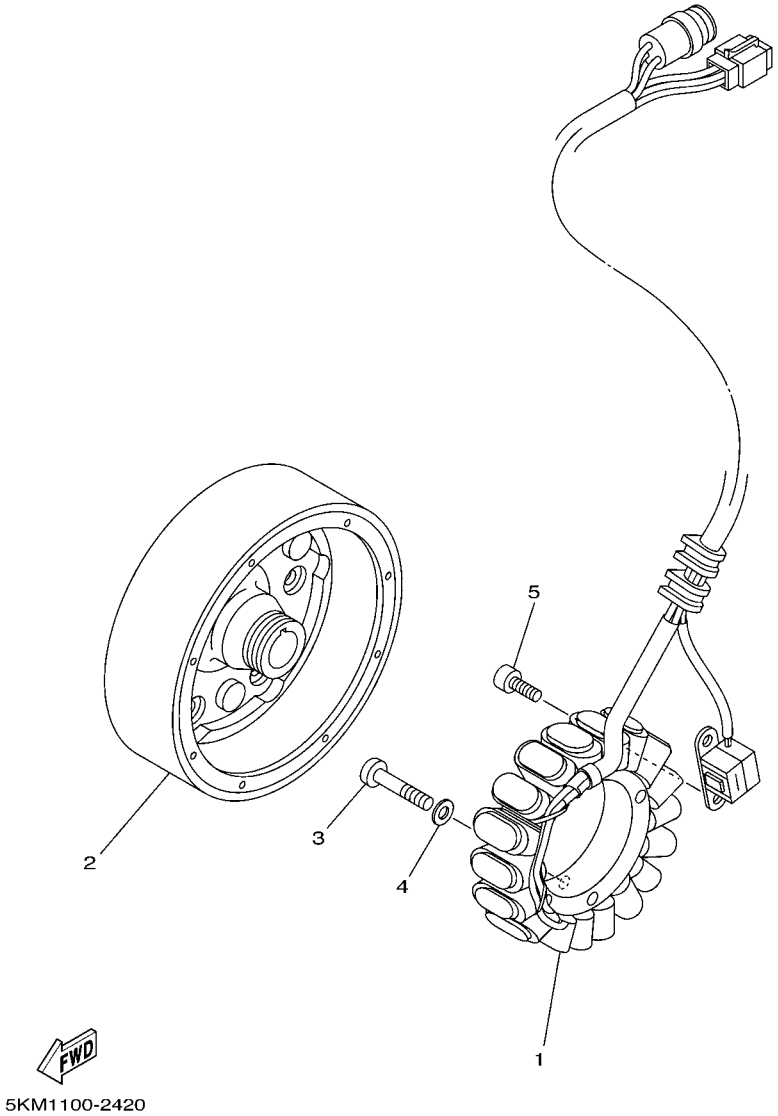

FIG. 42 GENERATOR

REF. NO.	PART NO.	DESCRIPTION	USA	CAN	EUR	OCE	JPN	REMARKS
1	5KM–81410–00	STATOR ASSY	1	1	1	1	1	
2	5KM–81450–10	ROTOR ASSY	1	1	1	1	1	
3	98507–06030	SCREW, PAN HEAD	3	3	3	3	3	
4	92907–06600	WASHER, PLATE	3	3	3	3	3	
5	91317–05012	BOLT	2	2	2	2	2	

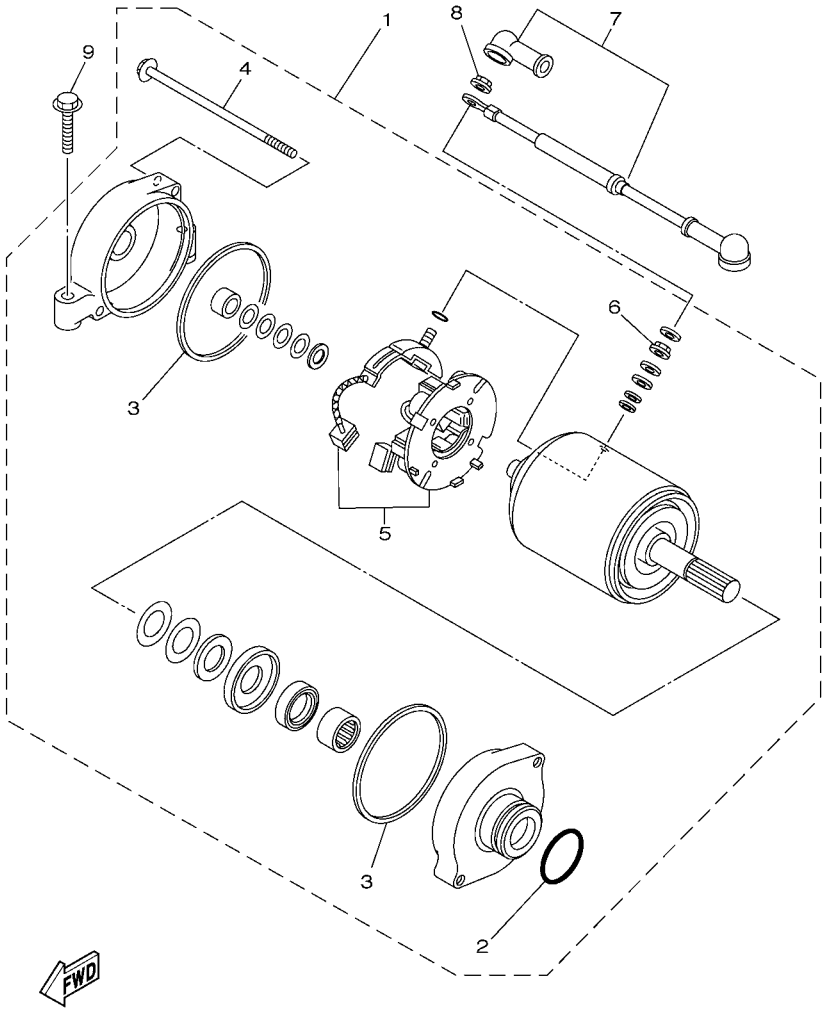

5ND6100-C440

FIG. 43 STARTING MOTOR

REF. NO.	PART NO.	DESCRIPTION	USA	CAN	EUR	OCE	JPN	REMARKS
1	5KM–81890–00	MOTOR ASSY	1	1	1	1	1	
2	1FK–81847–00	.O-RING	1	1	1	1	1	
3	11H–81844–00	.GASKET	2	2	2	2	2	
4	3AJ–81826–00	.BOLT	2	2	2	2	2	
5	3AJ–81801–00	.BRUSH SET	1	1	1	1	1	
6	4XV–8182A–00	.NUT	1	1	1	1	1	
7	5KM–81815–00	CORD, STARTER MOTOR	1	1	1	1	1	
8	4XV–8182A–00	NUT	1	1	1	1	1	
9	95027–06030	BOLT, FLANGE	2	2	2	2	2	

FIG. 44 METER

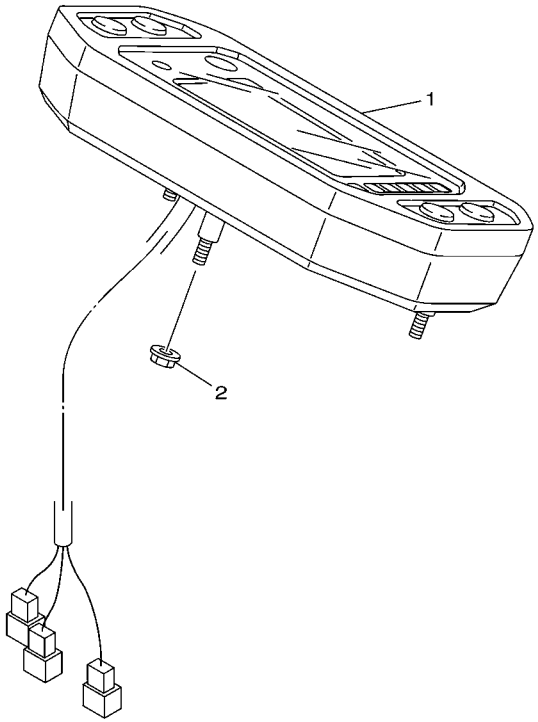

5KM9100-B440

REF. NO.	PART NO.	DESCRIPTION	USA	CAN	EUR	OCE	JPN	REMARKS
1	5KM–83500–40	SPEEDOMETER ASSY	1					MILE/H
	5KM–83500–50	SPEEDOMETER ASSY		1	1	1	1	KM/H
2	95707–05500	NUT, FLANGE	3	3	3	3	3	

FIG. 45 HEADLIGHT

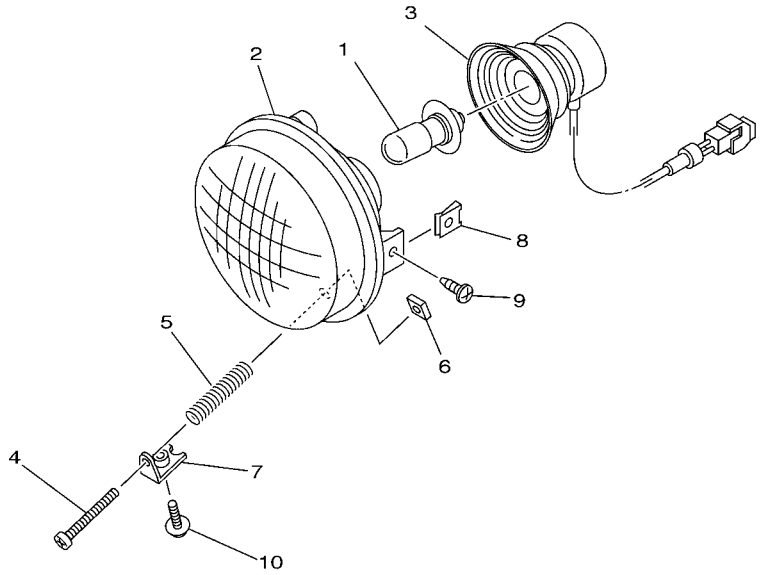

5KM1100-2450

REF. NO.	PART NO.	DESCRIPTION	USA	CAN	EUR	OCE	JPN	REMARKS
1	4KB–84314–01	BULB (12V-30/30W)	2	2	2	2	2	
2	5KM–84320–01	LENS ASSY	1	1	1	1	1	
3	5EH–84340–00	SOCKET CORD ASSY 1	2	2	2	2	2	
4	98507–03540	SCREW, PAN HEAD	2	2	2	2	2	
5	2GU–84332–00	SPRING, SCREW	2	2	2	2	2	
6	2GU–84334–00	NUT, ADJUSTING	2	2	2	2	2	
7	5KM–84703–00	BRACKET	2	2	2	2	2	
8	90183–05008	NUT, SPRING	4	4	4	4	4	
9	90154–05004	SCREW, BINDING	4	4	4	4	4	
10	90159–05022	SCREW, WITH WASHER	2	2	2	2	2	

FIG. 46 TAILLIGHT

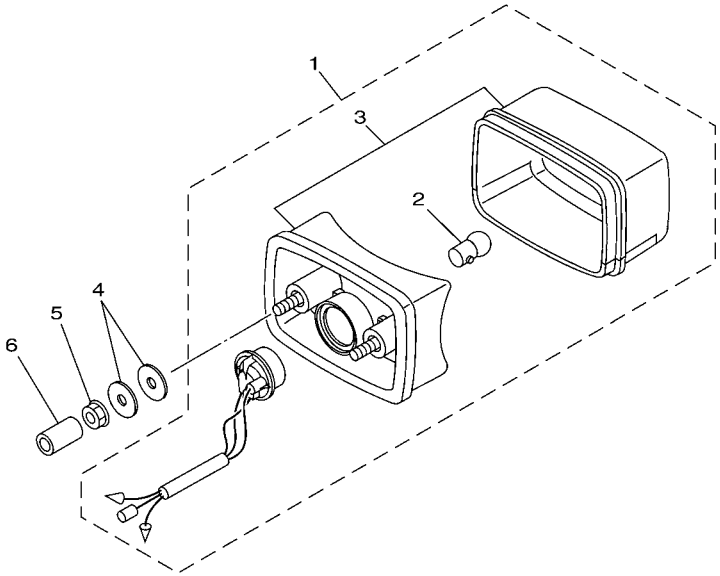

5KM1100-2461

REF. NO.	PART NO.	DESCRIPTION	USA	CAN	EUR	OCE	JPN	REMARKS
1	5KM–84710–00	TAILLIGHT UNIT ASSY	1		1	1	1	
2	1A2–84714–41	.BULB (12V-21/5W)	1		1	1	1	
3	5KM–8472C–10	.LENS, TAILLIGHT	1		1	1	1	
4	90201–06074	WASHER, PLATE	4		4	4	4	
5	95707–06300	NUT, FLANGE	2		2	2	2	
6	90445–09220	HOSE (L30)	2		2	2	2	

FIG. 47 TAILLIGHT 2

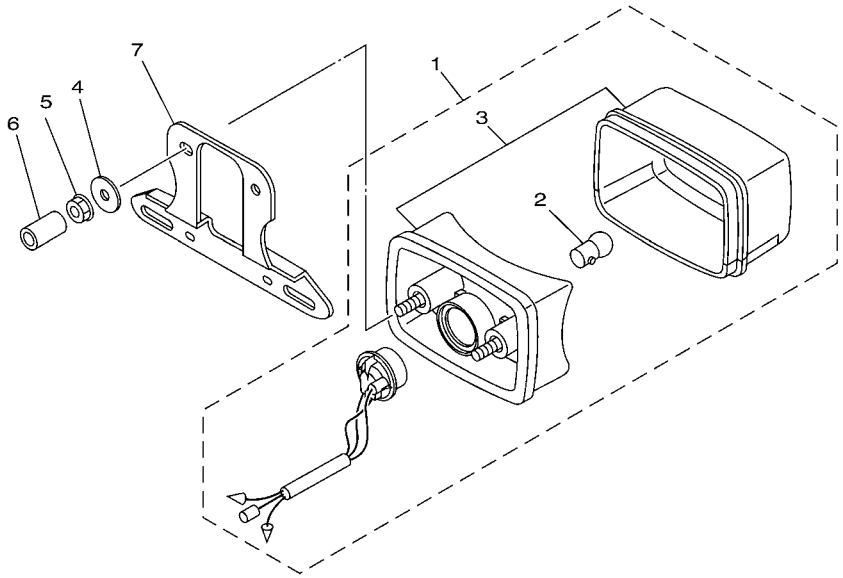

REF. NO.	PART NO.	DESCRIPTION	USA	CAN	EUR	OCE	JPN	REMARKS
1	5KM–84710–00	TAILLIGHT UNIT ASSY		1				
2	1A2–84714–41	.BULB (12V-21/5W)		1				
3	5KM–8472C–10	.LENS, TAILLIGHT		1				
4	90201–06074	WASHER, PLATE		2				
5	95707–06300	NUT, FLANGE		2				
6	90445–09220	HOSE (L30)		2				
7	5GH–84751–10	BRACKET, LICENSE		1				

FIG. 48 HANDLE SWITCH & LEVER

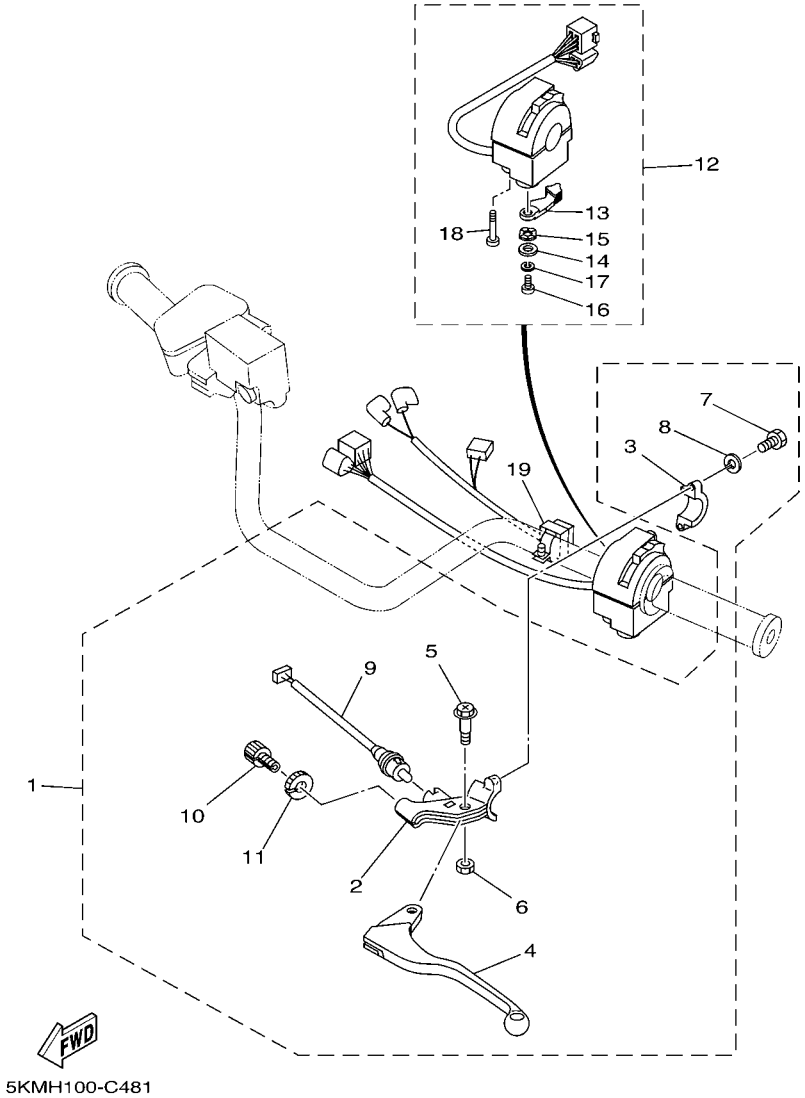

REF. NO.	PART NO.	DESCRIPTION	USA	CAN	EUR	OCE	JPN	REMARKS
1	5KM–82910–01	LEVER HOLDER ASSY (LEFT)	1	1	1	1	1	
2	1YW–82911–02	.HOLDER, LEVER 1	1	1	1	1	1	
3	2XJ–82913–00	.HOLDER, LEVER LOWER 1	1	1	1	1	1	
4	23X–83912–00	.LEVER 1	1	1	1	1	1	
5	90109–06799	.BOLT	1	1	1	1	1	
6	95607–06100	.NUT, U	1	1	1	1	1	
7	98507–06020	.SCREW, PAN HEAD	2	2	2	2	2	
8	92907–06100	.WASHER, SPRING	2	2	2	2	2	
9	5KM–82917–00	.SWITCH	1	1	1	1	1	
10	90123–08046	.BOLT	1	1	1	1	1	
11	90179–08148	.NUT	1	1	1	1	1	
12	5KM–83972–00	SWITCH, HANDLE 4	1	1	1	1	1	
13	5KM–83941–00	.LEVER, STARTER	1	1	1	1	1	
14	1UY–83909–00	.WASHER, SPECIAL	1	1	1	1	1	
15	3L4–83943–00	.WASHER, STARTER	1	1	1	1	1	
16	98507–05012	.SCREW, PAN HEAD	1	1	1	1	1	
17	92907–05100	.WASHER, SPRING	1	1	1	1	1	
18	98507–05035	.SCREW, PAN HEAD	2	2	2	2	2	
19	4GB–83976–00	SWITCH, HANDLE 1			1	1		

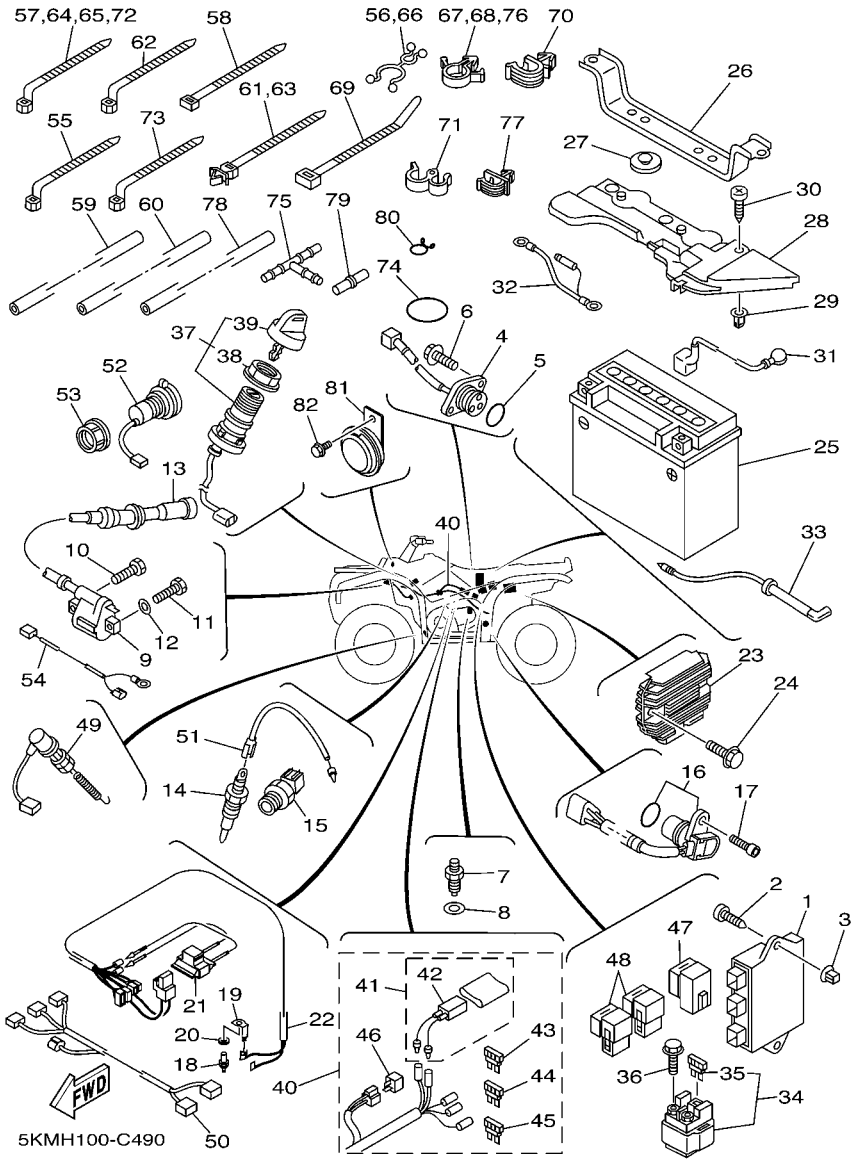

FIG. 49 ELECTRICAL 1

REF. NO.	PART NO.	DESCRIPTION	USA	CAN	EUR	OCE	JPN	REMARKS
1	5KM–85540–10	C.D.I. UNIT ASSY	1	1	1	1	1	
2	97707–60025	SCREW, TAPPING	1	1	1	1	1	
3	90338–08226	PLUG	1	1	1	1	1	
4	5KM–82540–00	NEUTRAL SWITCH ASSY	1	1	1	1	1	
5	93210–29196	O-RING	1	1	1	1	1	
6	90119–06044	BOLT, WITH WASHER	2	2	2	2	2	
7	5LP–82540–01	NEUTRAL SWITCH ASSY	1	1	1	1	1	
8	90430–10148	GASKET	1	1	1	1	1	
9	3KJ–82310–10	IGNITION COIL ASSY	1	1	1	1	1	
10	90109–06723	BOLT	1	1	1	1	1	
11	97007–06020	BOLT	1	1	1	1	1	
12	92907–06600	WASHER, PLATE	1	1	1	1	1	
13	3YF–82370–00	PLUG CAP ASSY	1	1	1	1	1	
14	5KM–82560–00	THERMO SWITCH ASSY	1	1	1	1	1	
15	5GM–82560–00	THERMO SWITCH ASSY	1	1	1	1	1	
16	5UG–83755–01	SENSOR, SPEED	1	1	1	1	1	
17	91317–06016	BOLT	1	1	1	1	1	
18	4TR–83790–00	HEATER ASSY (15W)			1	1		AP
19	5FU–82103–00	TERMINAL 1			1	1		AP
20	90201–08016	WASHER, PLATE			1	1		AP
21	1AJ–82560–01	THERMO SWITCH ASSY			1	1		AP
22	5HA–82509–00	WIRE, SUB LEAD			1	1		AP
23	5BN–81960–00	RECTIFIER & REGULATOR ASSY	1	1	1	1	1	
24	95807–06020	BOLT, FLANGE	1	1	1	1	1	
25	4SH–82100–22	BATTERY ASSY (YUASA YTX20L-BS)	1	1	1	1		
	90793–26092	BATTERY ASSY (YUASA YTX20L-BS)					1	
26	5KM–82128–00	BRACKET, BATTERY	1	1	1	1	1	

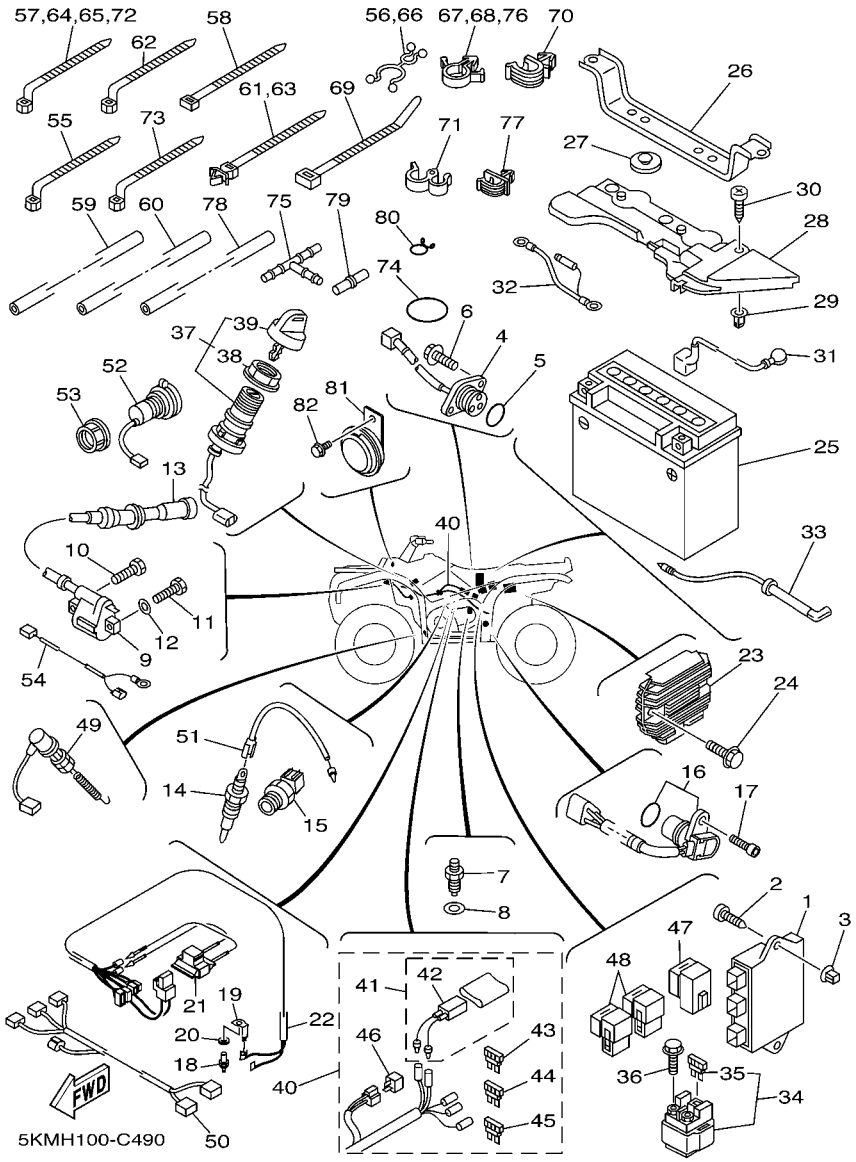

FIG. 49 ELECTRICAL 1

REF. NO.	PART NO.	DESCRIPTION	USA	CAN	EUR	OCE	JPN	REMARKS
27	371–82121–00	PAD, BATTERY	2	2	2	2	2	
28	5KM–82129–00	COVER, BATTERY	1	1	1	1	1	
29	90338–08226	PLUG	1	1	1	1	1	
30	97707–60016	SCREW, TAPPING	1	1	1	1	1	
31	5KM–82115–00	WIRE, PLUS LEAD	1	1	1	1	1	
32	5KM–82116–00	WIRE, MINUS LEAD	1	1	1	1	1	
33	5KM–82541–00	WIRE, LEAD	1	1	1	1	1	
34	4SV–81940–12	STARTER RELAY ASSY	1	1	1	1	1	
35	1AE–82151–00	.FUSE (30A-BL)	2	2	2	2	2	
36	95027–06008	BOLT, FLANGE	2	2	2	2	2	
37	5KM–82510–00	MAIN SWITCH ASSY	1	1	1	1	1	
38	3HN–82569–00	.NUT, MAIN SWITCH	1	1	1	1	1	
39	3HN–82579–00	.CAP, KEY	1	1	1	1	1	
40	5KM–82590–20	WIRE HARNESS ASSY	1	1			1	
	5KM–82590–30	WIRE HARNESS ASSY			1	1		
41	5GT–82180–00	.CIRCUIT BREAKER ASSY	1	1	1	1	1	
42	5GT–82560–00	..THERMO SWITCH ASSY	1	1	1	1	1	
43	5JJ–82151–10	.FUSE (15A-BL)	2	2	2	2	2	
44	5JJ–82151–30	.FUSE (10A-BL)	5	5	5	5	5	
45	5JJ–82151–50	.FUSE (3A-BL)	2	2	2	2	2	
46	3WP–81980–00	.DIODE ASSY	1	1	1	1	1	
47	29U–81950–93	RELAY ASSY	1	1	1	1	1	
48	5DM–81950–00	RELAY ASSY	2	2	2	2	2	
49	5KM–82530–00	STOP SWITCH ASSY	1	1	1	1	1	
50	5KM–82309–00	WIRE, SUB LEAD	1	1	1	1	1	
51	5KM–82507–00	WIRE, LEAD	1	1	1	1	1	
52	5GH–8254B–00	TERMINAL COMP.	1	1	1	1	1	

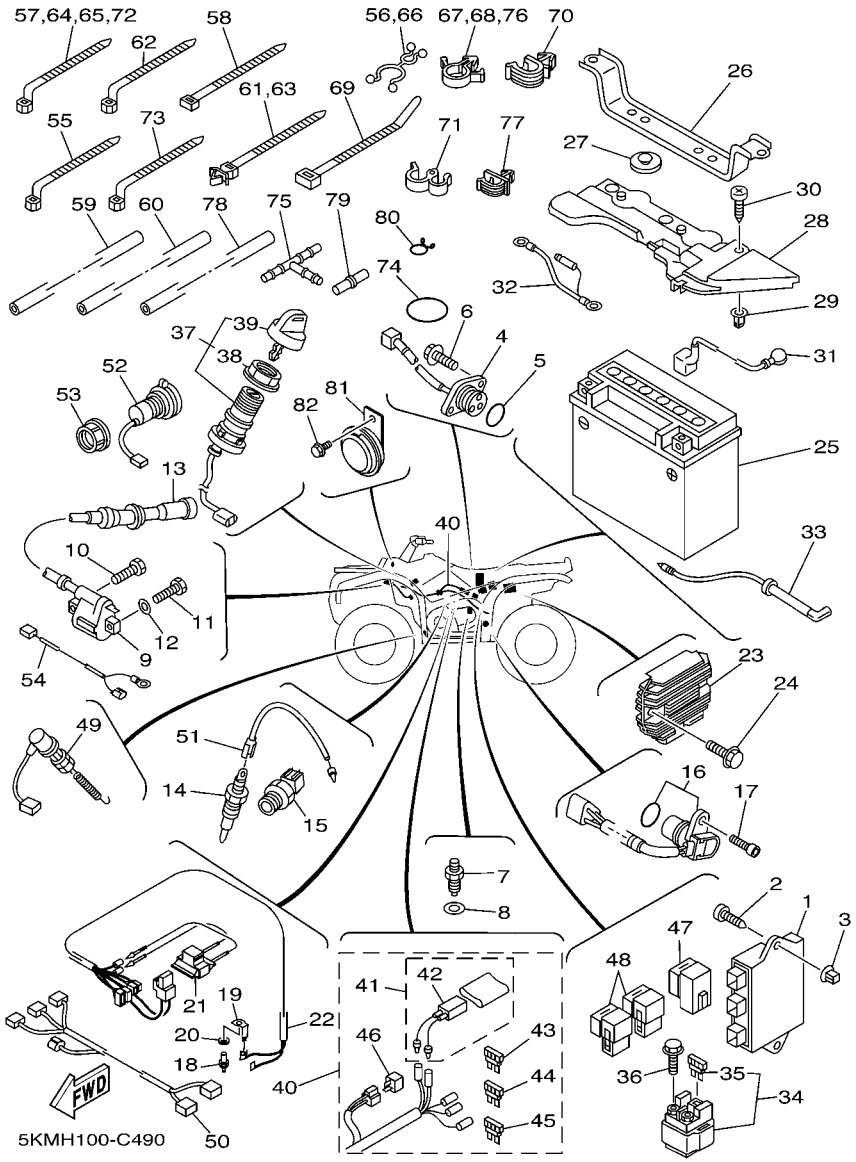

FIG. 49 ELECTRICAL 1

REF. NO.	PART NO.	DESCRIPTION	USA	CAN	EUR	OCE	JPN	REMARKS
53	5GH–82114–00	NUT	1	1	1	1	1	
54	5KM–82509–10	WIRE, SUB LEAD	1	1	1	1	1	
55	90464–12045	CLAMP	2	2	2	2	2	
56	90464–35047	CLAMP	1	1	1	1	1	
57	90464–15195	CLAMP	1	1	1	1	1	
58	437–83936–01	BAND, SWITCH CORD	4	4	4	4	4	
59	90445–07371	HOSE (L700)	1	1	1	1	1	
60	90445–07176	HOSE (L200)	1	1	1	1	1	
61	90464–12089	CLAMP	1	1	1	1	1	
62	90460–15126	CLAMP, HOSE	1	1	1	1	1	
63	90464–12089	CLAMP	2	2	2	2	2	
64	90464–15195	CLAMP	1	1	1	1	1	
65	90464–15195	CLAMP	1	1	1	1	1	
66	90464–35047	CLAMP	1	1	1	1	1	
67	90464–15157	CLAMP	1	1	1	1	1	
68	90464–15157	CLAMP	1	1	1	1	1	
69	90465–10098	CLAMP	1	1	1	1	1	
70	90464–14M55	CLAMP	1	1	1	1	1	
71	90468–15139	CLIP	1	1	1	1	1	
72	90464–15195	CLAMP	1	1	1	1	1	
73	90464–13073	CLAMP	1	1	1	1	1	
74	93210–975A9	O-RING	1	1	1	1	1	
75	90413–05014	WAY 3	1	1	1	1	1	
76	90464–15157	CLAMP	1	1	1	1	1	
77	90464–07001	CLAMP	1	1	1	1	1	
78	90446–09155	HOSE (L970)	1	1	1	1	1	
79	5KM–82109–00	JOINT, HOSE	2	2	2	2	2	

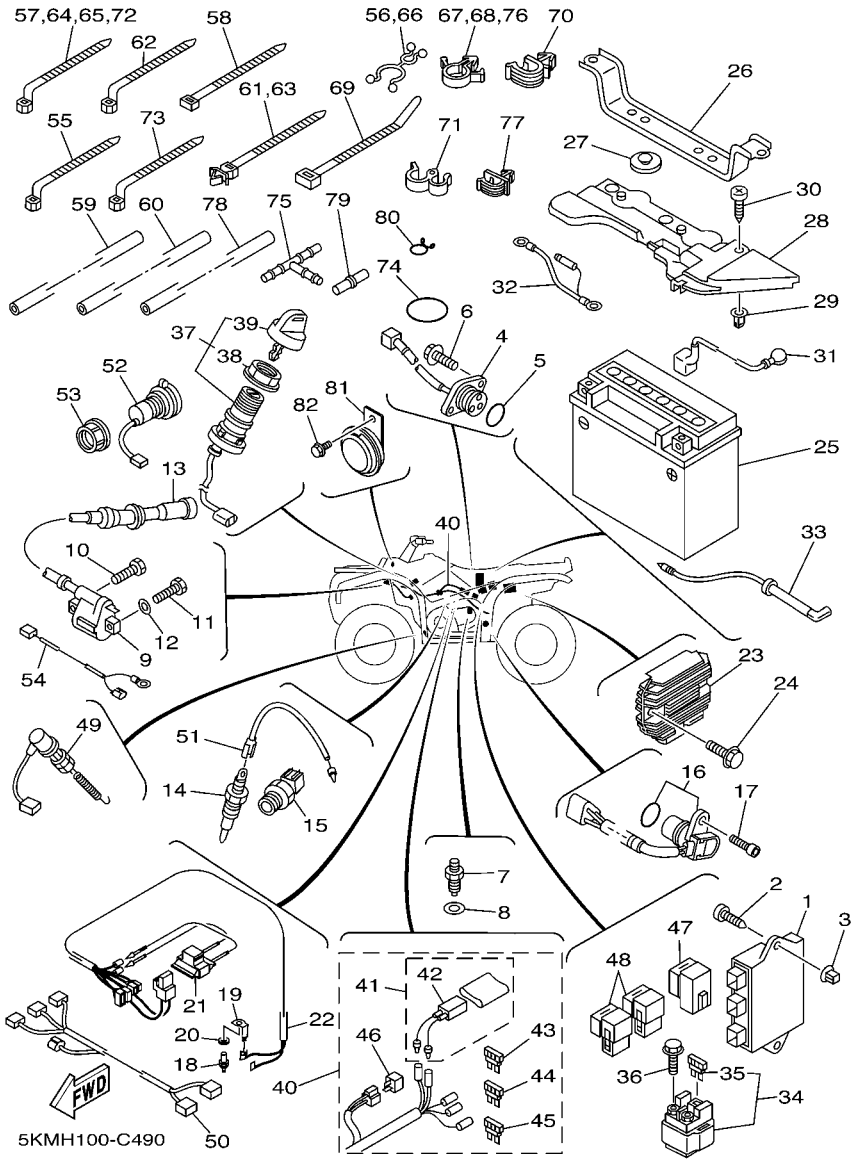

FIG. 49 ELECTRICAL 1

REF. NO.	PART NO.	DESCRIPTION	USA	CAN	EUR	OCE	JPN	REMARKS
80	90467–08021	CLIP	1	1	1	1	1	
81	4WV–83371–00	HORN			1	1		
82	95817–06012	BOLT, FLANGE			1	1		

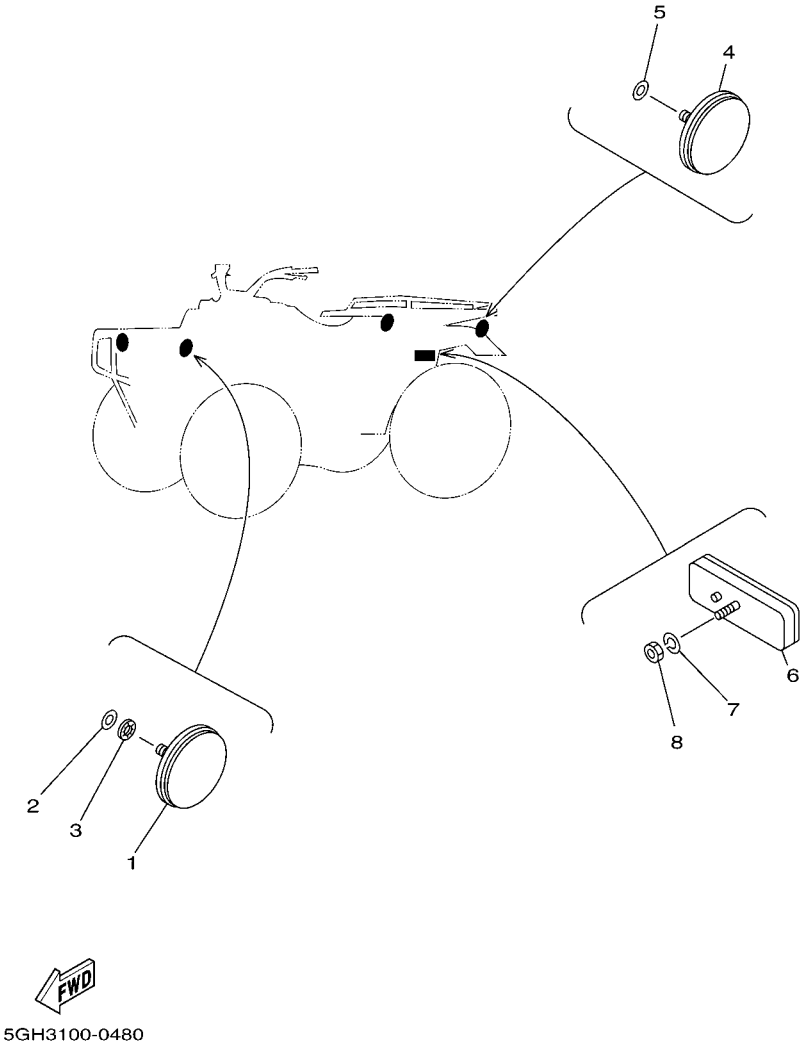

FIG. 50 ELECTRICAL 2

REF. NO.	PART NO.	DESCRIPTION	USA	CAN	EUR	OCE	JPN	REMARKS
1	2EK–85111–00	REFLECTOR, FRONT 1		2				
2	92907–05200	WASHER		2				
3	90183–05024	NUT, SPRING		2				
4	449–85131–02	REFLECTOR, REAR 1		2				
5	92907–05200	WASHER		2				
6	3Y6–85130–02	REAR REFLECTOR ASSY		1	1			
7	92907–05100	WASHER, SPRING		1	1			
8	95307–05600	NUT		1	1			

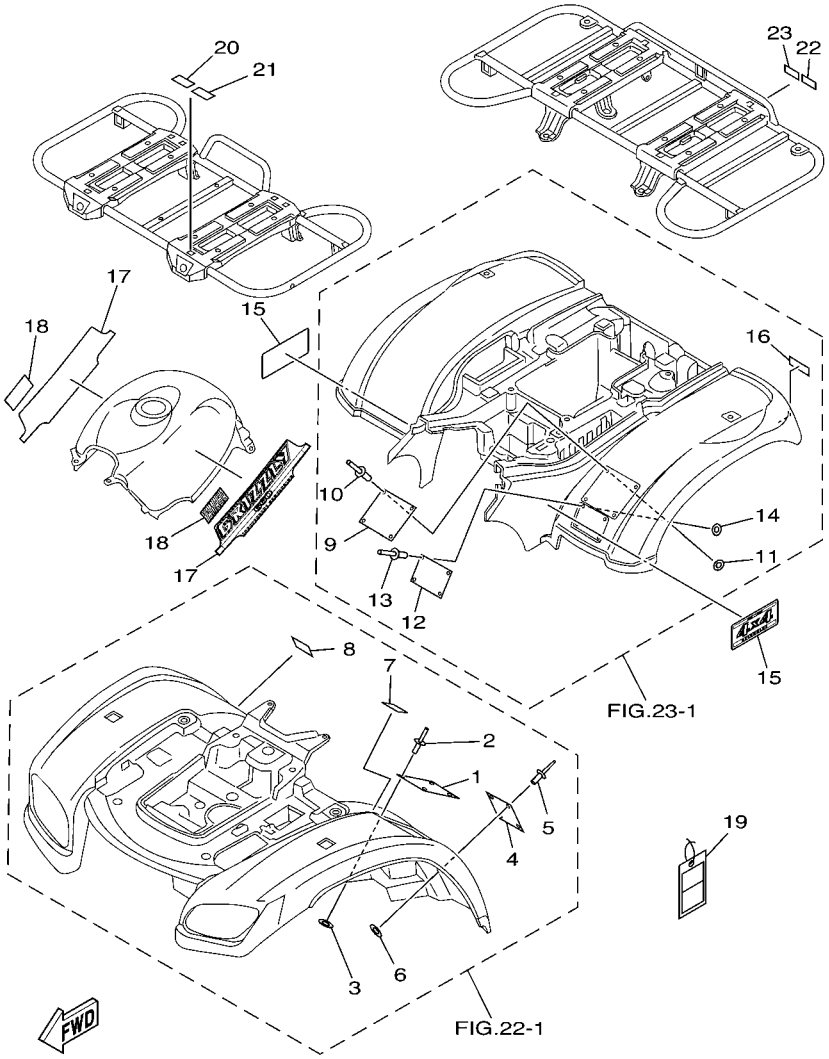

FIG. 51 EMBLEM & LABEL 1

REF. NO.	PART NO.	DESCRIPTION	USA	CAN	EUR	OCE	JPN	REMARKS
1	5FE–21568–01	LABEL, WARNING	1					ENGLISH
2	90267–32004	RIVET, BLIND	6					
3	90201–03313	WASHER, PLATE	6					
4	5FE–21697–01	LABEL, CAUTION 2	1					ENGLISH
5	90267–32004	RIVET, BLIND	4					
6	90201–03313	WASHER, PLATE	4					
7	5GH–2151E–00	LABEL 2	1					ENGLISH
8	5KM–21558–00	LABEL, WARNING 2	1					ENGLISH
9	5KM–21696–00	LABEL, CAUTION	1					ENGLISH
10	90267–32004	RIVET, BLIND	4					
11	90201–03313	WASHER, PLATE	4					
12	5FE–2151H–01	LABEL 5	1					ENGLISH
13	90267–32004	RIVET, BLIND	4					
14	90201–03313	WASHER, PLATE	4					
15	2C6–2163G–00	EMBLEM 1	2					UR PDG
	2C6–2163G–10	EMBLEM 1	2					UR RTR
	2C6–2163G–20	EMBLEM 1	2					UR DPBSN
16	5KM–2151K–00	LABEL 7	1					ENGLISH
17	2C6–2173E–00	GRAPHIC 1	2					UR PDG
	2C6–2173E–10	GRAPHIC 1	2					UR RTR
	2C6–2173E–20	GRAPHIC 1	2					UR DPBSN
18	5KM–2173B–00	EMBLEM 3D	2					
19	5KM–2819R–00	TAG, WARNING	1					
20	3MX–24875–A0	LABEL 1	1					ENGLISH
21	3GC–24877–A0	LABEL, CAUTION	1					ENGLISH
22	3MX–24875–A0	LABEL 1	1					ENGLISH
23	4WV–24877–A0	LABEL, CAUTION	1					ENGLISH

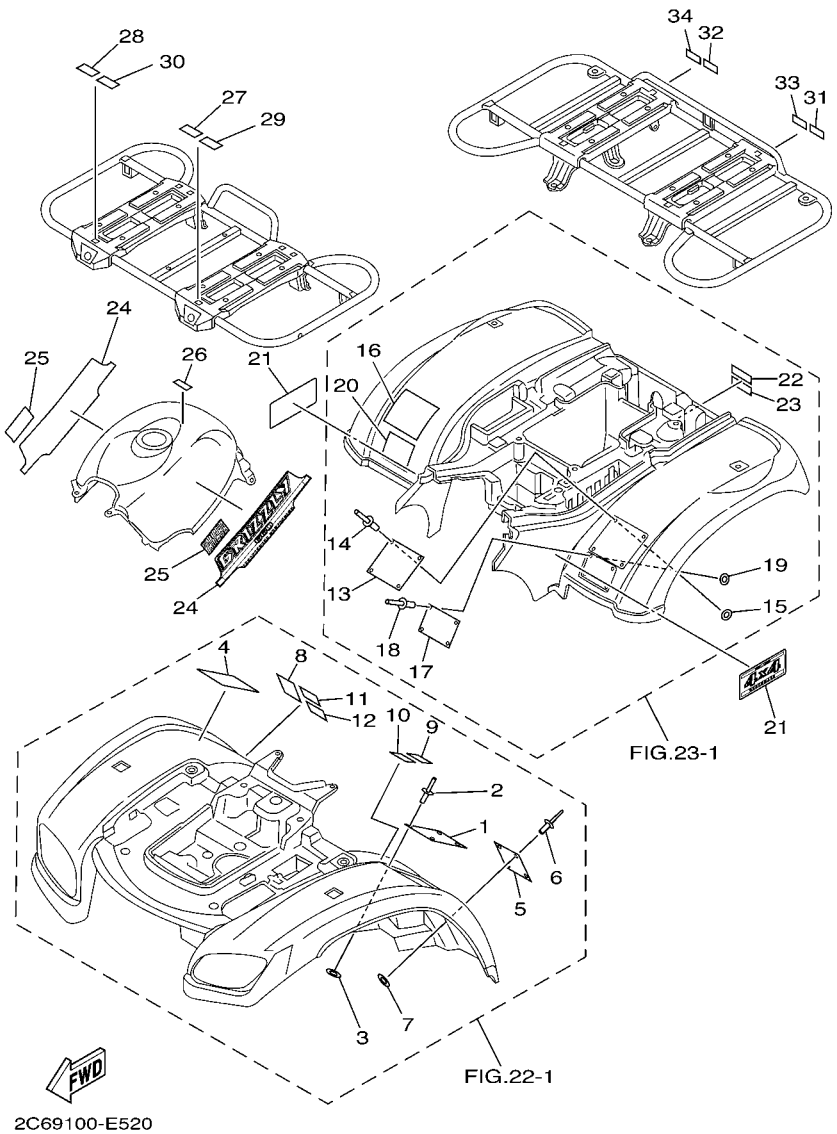

FIG. 52 EMBLEM & LABEL 2

REF. NO.	PART NO.	DESCRIPTION	USA	CAN	EUR	OCE	JPN	REMARKS
1	5FE–21568–01	LABEL, WARNING		1				ENGLISH
2	90267–32004	RIVET, BLIND		6				
3	90201–03313	WASHER, PLATE		6				
4	4WU–21568–10	LABEL, WARNING		1				FRENCH
5	5FE–21697–01	LABEL, CAUTION 2		1				ENGLISH
6	90267–32004	RIVET, BLIND		4				
7	90201–03313	WASHER, PLATE		4				
8	3JM–21697–10	LABEL, CAUTION 2		1				FRENCH
9	5GH–2151E–00	LABEL 2		1				ENGLISH
10	5GH–2151E–10	LABEL 2		1				FRENCH
11	5KM–21558–00	LABEL, WARNING 2		1				ENGLISH
12	5KM–21558–10	LABEL, WARNING 2		1				FRENCH
13	5KM–21696–00	LABEL, CAUTION		1				ENGLISH
14	90267–32004	RIVET, BLIND		4				
15	90201–03313	WASHER, PLATE		4				
16	5KM–21696–10	LABEL, CAUTION		1				FRENCH
17	5FE–2151H–01	LABEL 5		1				ENGLISH
18	90267–32004	RIVET, BLIND		4				
19	90201–03313	WASHER, PLATE		4				
20	4WU–2151H–10	LABEL 5		1				FRENCH
21	2C6–2163G–00	EMBLEM 1		2				UR PDG
	2C6–2163G–10	EMBLEM 1		2				UR RTR
	2C6–2163G–20	EMBLEM 1		2				UR DPBSN
22	5KM–2151K–00	LABEL 7		1				ENGLISH
23	5KM–2151K–10	LABEL 7		1				FRENCH
24	2C6–2173E–00	GRAPHIC 1		2				UR PDG
	2C6–2173E–10	GRAPHIC 1		2				UR RTR

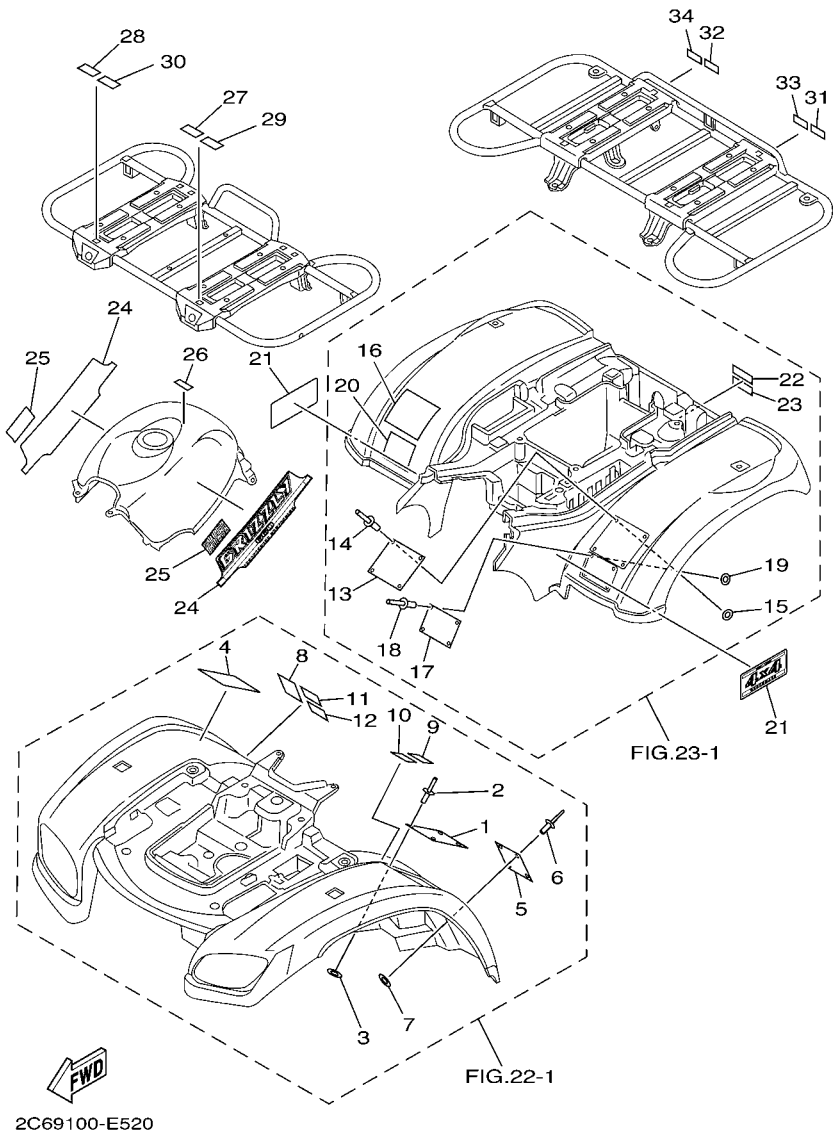

FIG. 52 EMBLEM & LABEL 2

REF. NO.	PART NO.	DESCRIPTION	USA	CAN	EUR	OCE	JPN	REMARKS
24	2C6–2173E–20	GRAPHIC 1		2				UR DPBSN
25	5KM–2173B–00	EMBLEM 3D		2				
26	4SH–2416E–00	LABEL, CAUTION CANADA		1				ENGLISH
27	3MX–24875–A0	LABEL 1		1				ENGLISH
28	3MX–24875–B0	LABEL 1		1				FRENCH
29	3GC–24877–A0	LABEL, CAUTION		1				ENGLISH
30	3GC–24877–B0	LABEL, CAUTION		1				FRENCH
31	3MX–24875–A0	LABEL 1		1				ENGLISH
32	3MX–24875–B0	LABEL 1		1				FRENCH
33	4WV–24877–A0	LABEL, CAUTION		1				ENGLISH
34	4WV–24877–B0	LABEL, CAUTION		1				FRENCH

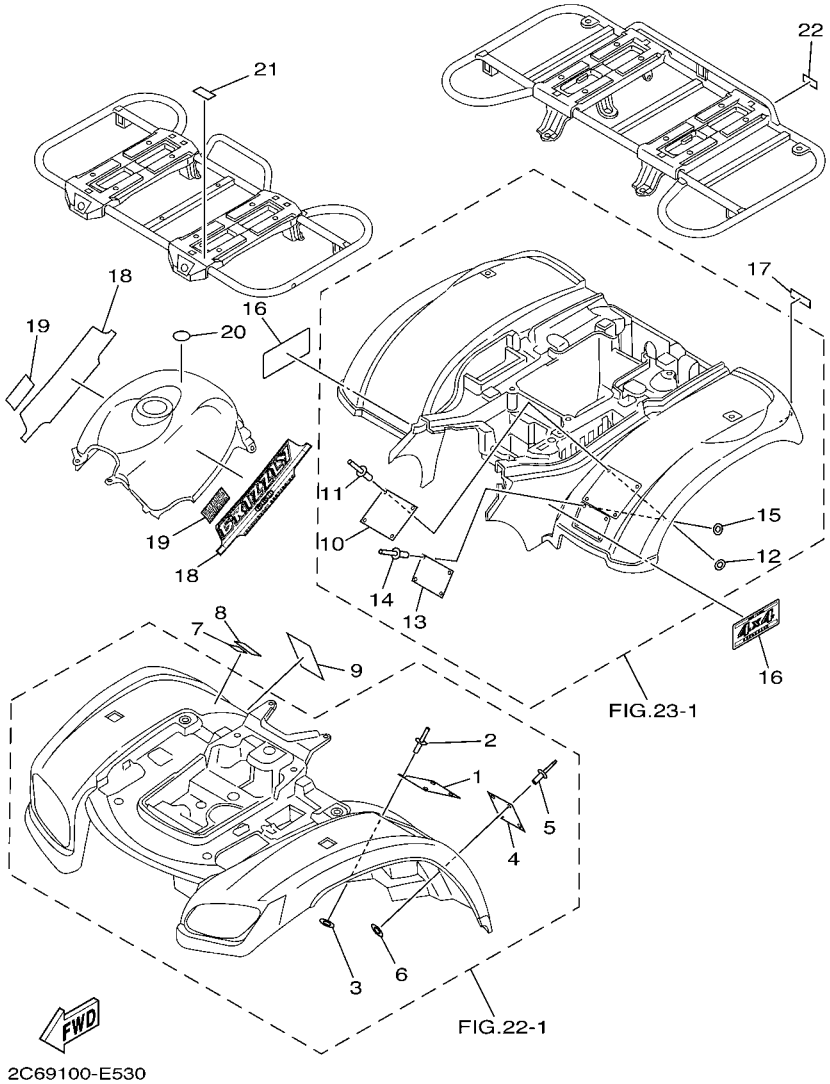

FIG. 53 EMBLEM & LABEL 3

REF. NO.	PART NO.	DESCRIPTION	USA	CAN	EUR	OCE	JPN	REMARKS
1	5FK–21568–00	LABEL, WARNING			1			
2	90267–32004	RIVET, BLIND			6			
3	90201–03313	WASHER, PLATE			6			
4	5FK–21697–00	LABEL, CAUTION 2			1			
5	90267–32004	RIVET, BLIND			4			
6	90201–03313	WASHER, PLATE			4			
7	4GB–2155A–00	MARK,EC			1			
8	5KM–2156A–01	PLATE, MD			1			
9	5KM–21558–20	LABEL, WARNING 2			1			
10	5KM–21696–M0	LABEL, CAUTION			1			
11	90267–32004	RIVET, BLIND			4			
12	90201–03313	WASHER, PLATE			4			
13	5FK–2151H–00	LABEL 5			1			
14	90267–32004	RIVET, BLIND			4			
15	90201–03313	WASHER, PLATE			4			
16	2C6–2163G–00	EMBLEM 1			2			UR PDG
	2C6–2163G–10	EMBLEM 1			2			UR RTR
	2C6–2163G–30	EMBLEM 1			2			UR DPBSE
17	5KM–2151K–00	LABEL 7			1			ENGLISH
18	2C6–2173E–00	GRAPHIC 1			2			UR PDG
	2C6–2173E–10	GRAPHIC 1			2			UR RTR
	2C6–2173E–30	GRAPHIC 1			2			UR DPBSE
19	5KM–2173B–00	EMBLEM 3D			2			
20	3ME–2415E–01	LABEL, CAUTION			1			
21	3GC–24877–A0	LABEL, CAUTION			1			ENGLISH
22	4WV–24877–A0	LABEL, CAUTION			1			ENGLISH

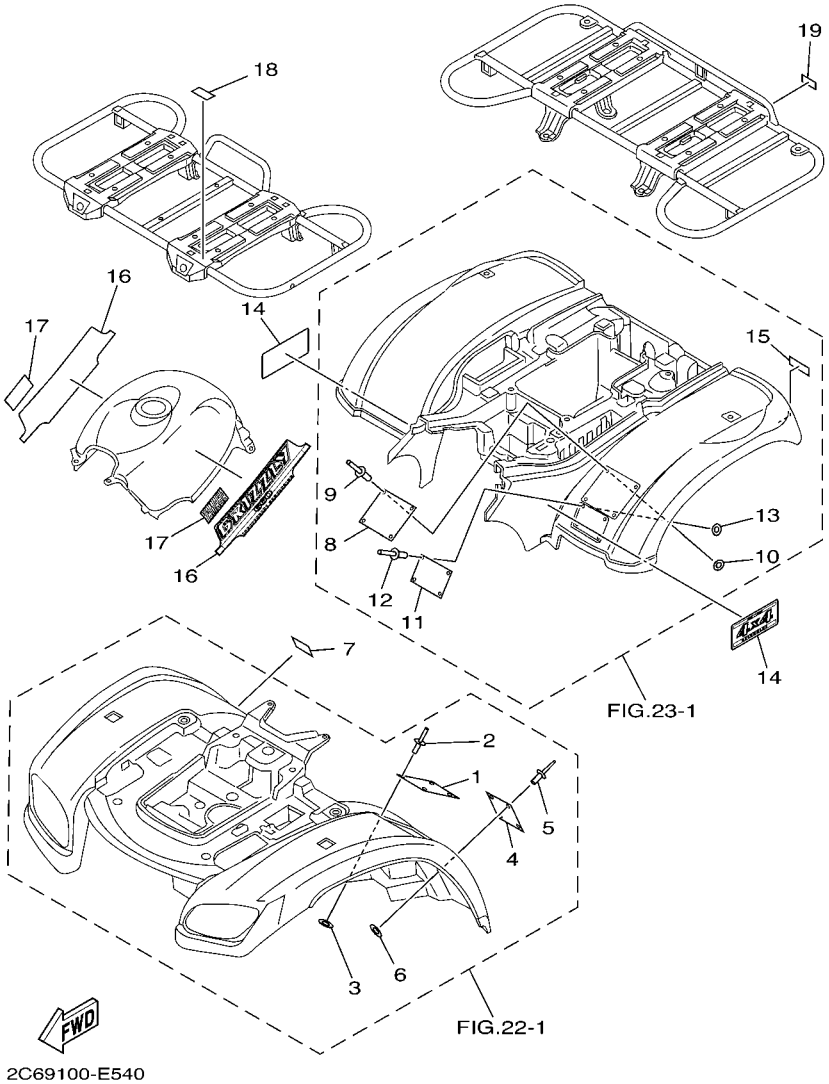

FIG. 54 EMBLEM & LABEL 4

REF. NO.	PART NO.	DESCRIPTION	USA	CAN	EUR	OCE	JPN	REMARKS
1	5FE–21568–11	LABEL, WARNING				1		ENGLISH
2	90267–32004	RIVET, BLIND				6		
3	90201–03313	WASHER, PLATE				6		
4	5FE–21697–01	LABEL, CAUTION 2				1		ENGLISH
5	90267–32004	RIVET, BLIND				4		
6	90201–03313	WASHER, PLATE				4		
7	5KM–21558–00	LABEL, WARNING 2				1		ENGLISH
8	5KM–21696–00	LABEL, CAUTION				1		ENGLISH
9	90267–32004	RIVET, BLIND				4		
10	90201–03313	WASHER, PLATE				4		
11	5FE–2151H–01	LABEL 5				1		ENGLISH
12	90267–32004	RIVET, BLIND				4		
13	90201–03313	WASHER, PLATE				4		
14	2C6–2163G–30	EMBLEM 1				2		
15	5KM–2151K–00	LABEL 7				1		ENGLISH
16	2C6–2173E–30	GRAPHIC 1				2		
17	5KM–2173B–00	EMBLEM 3D				2		
18	3GC–24877–A0	LABEL, CAUTION				1		ENGLISH
19	4WV–24877–A0	LABEL, CAUTION				1		ENGLISH

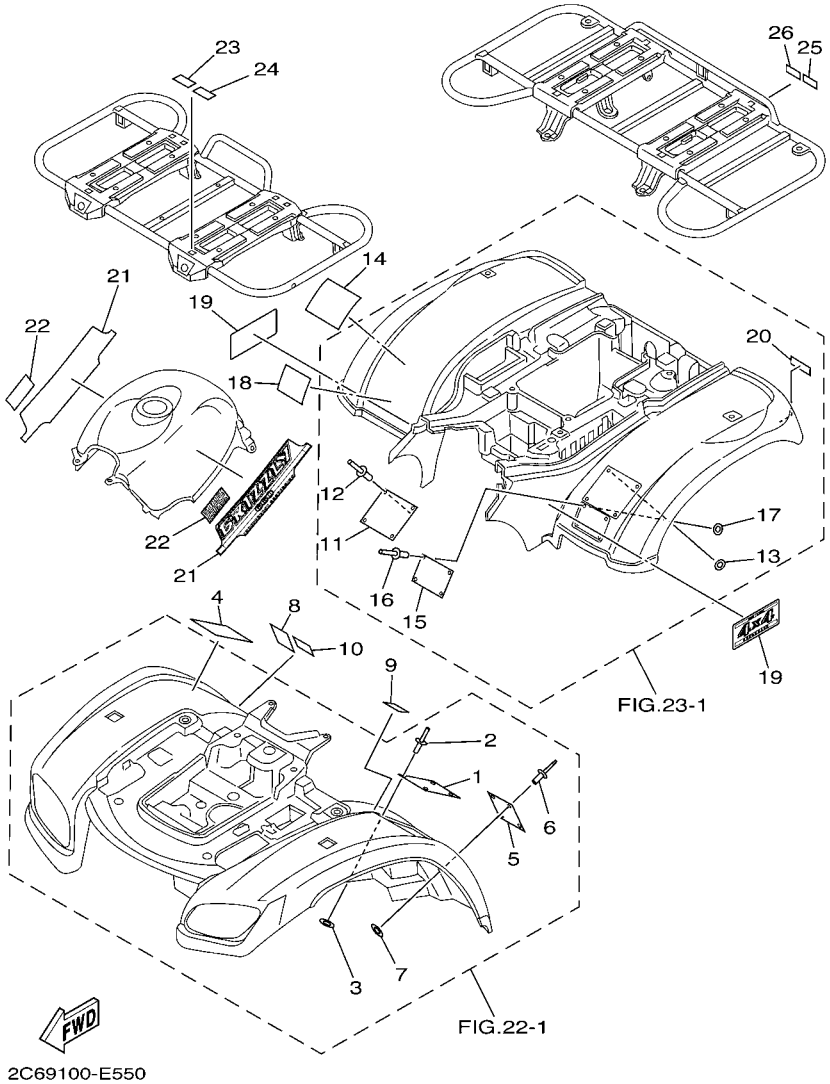

FIG. 55 EMBLEM & LABEL 5

REF. NO.	PART NO.	DESCRIPTION	USA	CAN	EUR	OCE	JPN	REMARKS
1	5FE–21568–11	LABEL, WARNING					1	ENGLISH
2	90267–32004	RIVET, BLIND					6	
3	90201–03313	WASHER, PLATE					6	
4	4SH–21568–00	LABEL, WARNING					1	JAPANESE
5	5FE–21697–01	LABEL, CAUTION 2					1	ENGLISH
6	90267–32004	RIVET, BLIND					4	
7	90201–03313	WASHER, PLATE					4	
8	4SH–21697–00	LABEL, CAUTION 2					1	JAPANESE
9	5GH–2151E–20	LABEL 2					1	
10	5KM–21558–30	LABEL, WARNING 2					1	
11	5KM–21696–00	LABEL, CAUTION					1	ENGLISH
12	90267–32004	RIVET, BLIND					4	
13	90201–03313	WASHER, PLATE					4	
14	5KM–21696–30	LABEL, CAUTION					1	
15	5FE–2151H–01	LABEL 5					1	ENGLISH
16	90267–32004	RIVET, BLIND					4	
17	90201–03313	WASHER, PLATE					4	
18	4LB–2151H–02	LABEL 5					1	JAPANESE
19	2C6–2163G–00	EMBLEM 1					2	
20	5KM–2151K–00	LABEL 7					1	ENGLISH
21	2C6–2173E–00	GRAPHIC 1					2	
22	5KM–2173B–00	EMBLEM 3D					2	
23	4SH–24875–00	LABEL 1					1	JAPANESE
24	4KD–24877–C0	LABEL, CAUTION					1	
25	4SH–24875–00	LABEL 1					1	JAPANESE
26	4WV–24877–C0	LABEL, CAUTION					1	

PART NO.	GRID NO.
5KM–11101–01	B – 2
5KM–11133–10	B – 2
5KM–11134–10	B – 2
5KM–11166–10	C – 5
3YF–11181–00	B – 4
1L9–11186–00	B – 2
3YF–11187–00	B – 2
214–11198–01	B – 13
	D – 15
	E – 4
5KM–11310–00	B – 4
5KM–11351–00	B – 4
5KM–11400–00	B – 5
5KM–11447–00	B – 5
5KM–11454–10	B – 5
5KM–11530–00	B – 5
5KM–11536–00	B – 5
5KM–11565–00	B – 5
2C6–11603–00	B – 5
2C6–11605–00	B – 5
2C6–11607–00	B – 5
3YF–11631–00–X0	B – 5
3YF–11633–01	B – 5
3YF–11636–00	B – 5
3YF–11638–00	B – 5
5LP–11651–00	B – 5
5KM–11681–00	B – 5
5KM–12111–00	B – 7
3YF–12113–00	B – 7
3YF–12114–00	B – 7
3YF–12116–00	B – 7
3YF–12117–01	B – 7
4G0–12118–00	B – 7
5H0–12119–00	B – 7
3YF–12121–00	B – 7
3YF–12146–00	B – 7
3YF–12151–00	B – 7
2NX–12156–00	B – 7
2NX–12159–00	B – 7
3YF–12161–00	B – 7
3YF–12162–00	B – 7
3YF–12163–00	B – 7
3YF–12166–00	B – 7
5KM–12170–00	B – 8
5KM–12176–00	B – 8
5KM–12210–00	B – 8
4DW–12213–00	B – 8
3TB–12215–01	B – 2

PART NO.	GRID NO.
5KM–12216–00	B – 8
5KM–12231–10	B – 8
3YF–12233–01	B – 8
5KM–12241–00	B – 8
3YF–12247–00	B – 8
3YF–12284–00	B – 8
3YF–12288–00	B – 8
3YF–12290–00	B – 8
5KM–12405–00	B – 10
5KM–12411–01	B – 10
5KM–12413–01	B – 10
5KM–12420–10	B – 9
5KM–12421–00	B – 9
5KM–12422–00	B – 9
5KM–12428–00	B – 9
11H–12438–10	B – 9
5KM–12450–10	B – 9
5KM–12461–00	B – 10
5HD–12462–00	B – 10
5KM–12469–00	B – 10
5KM–12481–00	B – 10
1AA–12535–00	B – 10
5KM–12576–00	B – 10
5KM–12577–00	B – 10
5KM–12578–00	B – 10
5KM–12579–00	B – 10
5KM–12611–00	B – 10
5KM–12620–00	B – 10
5KM–12630–00	B – 10
5GH–12647–00	B – 10
33M–12671–00	B – 10
5KM–12858–00	B – 13
3AJ–13161–01	B – 13
5KM–13171–00	B – 13
5KM–13181–00	B – 13
5KM–1319K–00	B – 14
5KM–13300–00	B – 13
5KM–13329–00	B – 13
5KM–13355–00	B – 13
5KM–13410–00	B – 13
5GH–13440–00	B – 13
5KM–13490–00	B – 13
5KM–13586–01	B – 12
5KM–13596–00	B – 12
5KM–14103–00	C – 2
5EA–14105–00	B – 15
5KM–1410A–00	B – 15
5DM–14141–30	B – 15

PART NO.	GRID NO.
4KM–14142–40	C – 2
4WV–14147–10	B – 15
1UY–14155–00	C – 2
522–14161–00	C – 2
127–14186–00	B – 15
5KM–14190–30	B – 15
12R–14191–00	B – 15
24W–14193–00	C – 2
5KM–14193–00	C – 2
3YX–14197–00	C – 2
5KM–14197–10	C – 2
5KM–14197–20	C – 2
3DM–14216–00	C – 2
3G2–14231–11	B – 15
1HX–14231–12	B – 15
3G2–1423E–61	B – 15
5GH–14261–00	B – 15
5AP–14280–00	C – 2
4WV–14293–00	B – 15
4WV–14349–00	C – 2
5KM–14411–10	B – 12
5KM–14412–10	B – 12
31A–14419–00	B – 12
5KM–14419–00	B – 12
5KM–1442F–01	B – 12
31A–14435–00	B – 12
5GH–14436–00	B – 12
5BF–1443E–00	C – 8
1UY–14451–00	B – 12
5KM–14452–00	B – 12
5KM–14453–00	B – 12
59V–14457–00	B – 12
1UY–14458–01	B – 12
1UY–14468–00	B – 12
583–14561–00	B – 15
5DM–14561–00	B – 15
1FN–14565–00	B – 15
5KM–14611–10	C – 3
3YF–14613–01	C – 4
5KM–14627–00	C – 3
5KM–14711–10	C – 3
5KM–14715–00	C – 3
5KM–14718–10	C – 3
5KM–14721–00	C – 3
5KM–14728–10	C – 3
5KM–14738–00	C – 3
5KM–14752–00	C – 3
3YF–14755–00	C – 3

PART NO.	GRID NO.
5KM–14788–00	C – 3
2C6–14901–00	B – 15
5KM–14901–10	B – 15
5KM–1490H–00	C – 2
5KM–1490J–00	B – 15
5UG–1490J–00	B – 15
5KM–14912–00	B – 15
5GH–14918–00	B – 15
5KM–14918–00	B – 15
4KM–14933–00	B – 15
5KM–14937–00	C – 2
256–14956–01	C – 2
5KM–14968–00	C – 2
5DM–14985–00	B – 15
28V–14988–00	C – 2
5KM–15100–11	C – 5
5KM–15113–00	C – 7
5KM–15163–00	C – 5
5KM–15199–00	C – 5
5KM–15315–00	C – 7
5KM–15351–00	C – 7
5KM–15362–00	C – 5
5UG–15371–00	D – 15
5KM–15379–00	C – 7
4WV–15381–00	C – 6
11H–15383–02	C – 15
4WV–15388–00	C – 5
5KM–15411–10	C – 7
5GH–15413–00	C – 8
5KM–15421–00	C – 7
5KM–15423–00	C – 8
5KM–15431–00	C – 7
5KM–15442–00	C – 5
5KM–15451–00	C – 7
5KM–15453–00	C – 7
5KM–15463–00	C – 5
5KM–15471–00	C – 7
5KM–15472–10	C – 8
5KM–15473–00	C – 8
5KM–15474–00	C – 8
5KM–15494–00	C – 8
5GH–15512–00	C – 10
5KM–15517–10	C – 10
5KM–15522–00	C – 10
5KM–15590–00	C – 10
5UH–15710–00	C – 9
5UH–15713–00	C – 9
24W–15714–00	C – 9

PART NO.	GRID NO.
21V–15715–01	C – 9
5UH–15716–00	C – 9
21V–15719–00	C – 7
5KM–15723–00	C – 9
21V–15741–00	C – 9
21V–15751–00	C – 9
3X3–15755–00	C – 9
21V–15767–00	C – 9
21V–15779–00	C – 9
5KM–16181–00	B – 5
5KM–16611–10	C – 11
5KM–16620–00	C – 11
5KM–16626–00	C – 11
4SH–16664–00	C – 11
5KM–17223–10	C – 13
5UG–17233–00	C – 13
2C6–17285–00	C – 13
5KM–17402–01	C – 13
5KM–17453–00	C – 13
5KM–17473–00	C – 13
5KM–17521–00	C – 15
5KM–17523–10	C – 13
4KB–17531–00	C – 15
5KM–17531–00	C – 15
4KB–17531–10	C – 15
5KM–17531–10	C – 15
4KB–17531–20	C – 15
5KM–17531–20	C – 15
4KB–17531–30	D – 2
5KM–17531–30	C – 15
4KB–17531–40	D – 2
5KM–17531–40	C – 15
4KB–17531–50	D – 2
5KM–17531–50	C – 15
4KB–17531–60	D – 2
5KM–17551–10	C – 15
2C6–17582–00	C – 13
5UG–17583–00	C – 14
5KM–17611–00	C – 11
5KM–1761A–10	D – 2
5KM–17620–00	C – 11
5KM–17623–00	C – 11
5KM–17632–00	C – 11
4WV–17639–10	C – 11
5KM–17641–00	C – 11
4WV–17644–00	C – 12
5KM–17645–00	C – 11
4WV–17653–00	C – 11

PART NO.	GRID NO.
4WV–17654–01	C – 11
4WV–17660–10	C – 11
4CW–17664–00	C – 12
4WV–17670–00	C – 11
5KM–17681–10	C – 13
4WV–17684–00	C – 12
5KM–17832–00	C – 15
5KM–18104–00	D – 5
5KM–18115–10	D – 5
5KM–18129–01	D – 5
5KM–18131–00	D – 5
5KM–18146–00	D – 5
5KM–18148–00	D – 3
2H9–18154–00	D – 5
1KT–18157–00	D – 5
5KM–18171–00	D – 3
5GH–18174–00	D – 5
5KM–18191–00	D – 5
5KM–18197–00	D – 5
4SH–18198–00	D – 5
5KM–18300–02	D – 5
5KM–18318–00	D – 3
5KM–18319–00	E – 3
5KM–18323–00	D – 3
5KM–18331–00	D – 3
5KM–18511–00	D – 3
5KM–18512–00	D – 3
5KM–18514–00	E – 3
5KM–18531–01	D – 3
5KM–18540–01	D – 3
5KM–18542–00	D – 3
1J7–18547–00	D – 4
4UN–18566–00	D – 3
5GH–18617–00	D – 5
5KM–21110–10	D – 7
5KM–2117G–10	F – 7
5KM–21315–00	D – 7
5KM–21316–00	D – 7
5KM–2133G–10	F – 6
5KM–21441–00	F – 7
5KM–2147A–00	D – 8
5KM–2147E–00	D – 8
5KM–2147F–00	D – 8
5KM–21485–10	D – 7
5KM–21486–10	D – 7
5KM–21513–00	D – 7
5GH–2151E–00	G – 7
	G – 8

PART NO.	GRID NO.
5GH–2151E–10	G – 8
5GH–2151E–20	G – 12
5FK–2151H–00	G – 10
5FE–2151H–01	G – 7
	G – 8
	G – 11
	G – 12
4LB–2151H–02	G – 12
4WU–2151H–10	G – 8
5KM–2151K–00	G – 7
	G – 8
	G – 10
	G – 11
	G – 12
5KM–2151K–10	G – 8
5KM–21557–00	D – 12
5KM–21558–00	G – 7
	G – 8
	G – 11
5KM–21558–10	G – 8
5KM–21558–20	G – 10
5KM–21558–30	G – 12
4GB–2155A–00	G – 10
4SH–21568–00	G – 12
5FK–21568–00	G – 10
5FE–21568–01	G – 7
	G – 8
4WU–21568–10	G – 8
5FE–21568–11	G – 11
	G – 12
5KM–2156A–01	G – 10
5KM–21575–10	D – 10
5KM–21585–00	D – 8
5KM–2160F–40	D – 11
5KM–21613–00	D – 11
5GH–2163E–00	D – 11
2C6–2163G–00	G – 7
	G – 8
	G – 10
	G – 12
2C6–2163G–10	G – 7
	G – 8
	G – 10
2C6–2163G–20	G – 7
	G – 8
2C6–2163G–30	G – 10
	G – 11
5KM–21652–10	D – 11

PART NO.	GRID NO.
5KM–21696–00	G – 7
	G – 8
	G – 11
	G – 12
5KM–21696–10	G – 8
5KM–21696–30	G – 12
5KM–21696–M0	G – 10
4SH–21697–00	G – 12
5FK–21697–00	G – 10
5FE–21697–01	G – 7
	G – 8
	G – 11
	G – 12
3JM–21697–10	G – 8
5KM–21710–10	D – 12
5KM–2171A–00	D – 12
5KM–2171A–10	D – 12
5KM–2171A–30	D – 12
5KM–2171A–40	D – 12
5KM–2171L–00	D – 12
5KM–21720–10	D – 12
5KM–2173B–00	G – 7
	G – 9
	G – 10
	G – 11
	G – 12
2C6–2173E–00	G – 7
	G – 8
	G – 10
	G – 12
2C6–2173E–10	G – 7
	G – 8
	G – 10
2C6–2173E–20	G – 7
	G – 9
2C6–2173E–30	G – 10
	G – 11
5KM–2174A–20	D – 12
5KM–2174M–10	D – 12
5KM–2174T–20	D – 12
5KM–2175B–00	D – 9
2C6–2177C–00	B – 12
1AA–21815–00	D – 12
5KM–21871–00	D – 12
1AA–21874–00	D – 12
5KM–2193A–00	D – 10
5KM–22128–00	D – 13
5KM–22129–00	D – 13

PART NO.	GRID NO.
5KM–22149–00	D – 13
5KM–22171–00	D – 13
5KM–22172–00	D – 13
5KM–2217M–00	D – 13
5KM–2217N–00	D – 13
5KM–22210–20	E – 5
5KM–22210–30	E – 5
5KM–22358–00	E – 4
5KM–23123–00	E – 6
5KM–23133–00	E – 6
5KM–23338–00	D – 9
5KM–23350–20	E – 6
5KM–23350–30	E – 6
5KM–23391–00	D – 9
5KM–23448–00	E – 15
5KM–23501–10	E – 11
5KM–23502–10	E – 12
2NL–23517–00	E – 15
5KM–23526–10	D – 13
	E – 6
5KM–23540–10	E – 6
5KM–23550–10	E – 6
5KM–23570–10	E – 6
5KM–23579–00	E – 6
5KM–23580–10	E – 6
1UY–23812–00	E – 7
5KM–23813–00	E – 7
8K1–23814–00	E – 7
5KM–23816–00	E – 7
5KM–23831–00	E – 7
1UY–23841–01	E – 7
1UY–23845–01	E – 7
5KM–2385L–00	E – 5
5KM–2385M–00	E – 5
5KM–23868–00	E – 7
5KM–2386G–00	E – 5
5KM–2386H–00	E – 5
5GT–23872–00	D – 7
1UY–23894–01	E – 7
5KM–24110–00	E – 8
5KM–2414H–00	E – 8
3ME–2415E–01	G – 10
4SH–2416E–00	G – 9
5KM–2416F–00	E – 9
5KM–24181–00	E – 8
5KM–24182–00	E – 8
5KM–24311–10	E – 8
5KM–24327–02	E – 8

PART NO.	GRID NO.
5KM–24411–00	B – 15
5KM–24500–01	E – 8
4X8–24512–00	E – 8
3AC–24523–00	E – 8
5GH–24524–00	E – 8
3AJ–24534–01	E – 8
5ND–24610–00	E – 8
5KM–24710–00	E – 10
5KM–24710–10	E – 10
5KM–24731–00	E – 10
5KM–24731–10	E – 10
5KM–2482H–00	F – 8
5KM–24841–10	F – 8
5KM–24842–20	F – 8
5KM–24842–30	F – 8
5KM–24845–00	F – 8
5KM–24846–00	F – 8
4SH–24875–00	G – 12
3MX–24875–A0	G – 7
	G – 9
3MX–24875–B0	G – 9
3GC–24877–A0	G – 7
	G – 9
	G – 10
	G – 11
4WV–24877–A0	G – 7
	G – 9
	G – 10
	G – 11
3GC–24877–B0	G – 9
4WV–24877–B0	G – 9
4KD–24877–C0	G – 12
4WV–24877–C0	G – 12
5KM–2510F–11	E – 11
5KM–2510G–11	E – 11
5KM–2510H–10	E – 11
5KM–2510J–20	E – 12
5KM–2510J–30	E – 11
5KM–25111–10	E – 11
3HN–2511G–01	E – 11
	E – 14
4KB–2511H–00	E – 14
5KM–2512A–00	E – 11
	E – 14
3HN–2512G–01	E – 11
	E – 14
4KB–2512H–00	E – 11
	E – 14

PART NO.	GRID NO.
2HR–2512J–00	E – 11
	E – 14
5KM–2514A–10	E – 13
5KM–25180–42	E – 11
5KM–2530F–10	E – 15
5KM–2530T–13	E – 14
5KM–2530U–13	E – 14
5KM–2530V–11	E – 15
5KM–2530W–11	E – 14
5KM–2530X–12	E – 14
5KM–2530Y–11	E – 14
5KM–25311–10	E – 14
5KM–2536E–10	E – 14
5KM–25390–42	E – 14
4WV–2580T–10	E – 13
4WV–2580U–10	E – 13
5KM–2580V–01	F – 2
5KM–2581J–10	F – 6
31A–2582A–50	F – 6
5KM–2582T–10	E – 13
5KM–2582V–00	F – 2
5KM–2583T–01	F – 4
5KM–2583V–00	F – 6
5GH–25844–00	F – 6
5JX–25852–01	F – 4
3XP–25852–50	F – 6
2VN–25854–00	F – 6
4L0–25854–00	F – 4
2VN–25855–00	F – 6
2GU–25866–00	F – 4
	F – 6
5GH–25867–00	F – 4
5KM–25871–00	F – 4
5KM–25872–00	F – 4
5KM–25873–10	F – 4
5KM–25874–00	F – 6
5KM–25875–00	F – 4
5KM–25882–00	F – 6
5KM–25886–00	F – 6
5JJ–25894–00	F – 6
5LP–25895–00	F – 7
1FK–2589F–00	F – 4
3GM–2589H–00	F – 6
3GD–25916–00	E – 13
5KM–25919–00	F – 2
8CR–25924–00	F – 2
8CR–25926–00	F – 2
3GD–25933–00	E – 13

PART NO.	GRID NO.
5KM–26111–00	F – 3
5KM–26124–00	F – 3
1NV–26129–00	F – 3
5FE–26232–00	D – 9
5LP–26241–00	F – 3
5KM–26250–00	F – 3
1NV–2625G–01	F – 3
1NV–2625K–00	F – 3
4KB–2628F–10	F – 3
4KB–2628G–00	F – 3
1NV–26304–00	F – 3
5KM–26311–10	F – 3
5KM–26331–10	F – 3
5EB–26332–00	F – 4
5KM–26341–00	F – 7
5KM–2637F–00	F – 7
1NV–26398–00	F – 3
371–27114–00	E – 10
5KM–27211–00	F – 5
5KM–27212–10	F – 5
4SS–27218–00	F – 6
2YK–27222–00	F – 6
5KM–27252–00	F – 5
5KM–27263–00	F – 5
5KM–27414–01	C – 3
5GH–2741A–00	F – 5
5KM–27453–01	F – 5
5KM–27463–01	F – 5
5KM–27481–10	F – 5
5KM–27488–10	F – 5
5KM–27491–00	F – 7
4WV–28100–00	D – 8
1NV–2811A–01	D – 8
5KM–2819R–00	G – 7
5KM–28309–00	D – 9
5KM–28309–10	D – 9
5GH–28349–00	D – 9
5KM–2837L–00	D – 9
5KM–2842M–00	F – 8
5KM–2842N–00	F – 8
5KM–2845N–00	F – 8
5KM–28488–00	D – 8
5KM–28488–10	D – 8
5KM–42752–00	E – 3
5KM–45531–10	E – 11
5KM–45593–00	D – 2
5KM–46101–12	D – 14
5KM–46102–00	D – 14

PART NO.	GRID NO.
22U–46117–00–25	D – 15
22U–46117–00–30	D – 15
22U–46117–00–40	D – 15
24W–46118–00–12	D – 14
24W–46118–00–14	D – 14
24W–46118–00–16	D – 14
24W–46118–00–18	D – 14
24W–46118–00–20	D – 14
4WV–46119–01	E – 3
5KM–46119–01	E – 4
4WV–46119–11	E – 3
5KM–46119–11	E – 4
4WV–46119–21	E – 3
5KM–46119–21	E – 4
4WV–46119–31	E – 3
5KM–46119–31	E – 4
4WV–46119–41	E – 3
5KM–46119–41	E – 4
4WV–46119–51	E – 3
5KM–46119–51	E – 4
5KM–46119–61	E – 4
5KM–46126–00	D – 15
2HR–46127–00–25	D – 14
2HR–46127–00–30	D – 14
2HR–46127–00–35	D – 14
2HR–46127–00–40	D – 14
2HR–46127–00–45	D – 14
2HR–46127–00–50	D – 14
5KM–46136–00	D – 15
5KM–46137–00	D – 15
5KM–46141–11	E – 3
5KM–46143–00	E – 3
5KM–46144–01	D – 14
4WV–46145–00	E – 3
5KM–46151–02	D – 14
5KM–46152–00	D – 15
5KM–46155–00	E – 3
2HR–46156–00	D – 15
4WV–46159–00	E – 3
5KM–46160–12	E – 3
5KM–46161–00	E – 3
5KM–46162–00	E – 3
4WV–46167–00	E – 4
5KM–4616A–01	E – 3
5KM–46172–00	D – 15
5KM–46173–10	E – 4
5KM–46212–00	D – 14
5KM–46441–00	E – 3

PART NO.	GRID NO.
5KM–46451–00	E – 4
5KM–46470–12	E – 3
5KM–46559–00	D – 15
5KM–47491–00	E – 5
5KM–67839–00	E – 3
5KM–81410–00	F – 9
5KM–81450–10	F – 9
5KM–81677–00	F – 7
3AJ–81801–00	F – 10
5KM–81815–00	F – 10
3AJ–81826–00	F – 10
4XV–8182A–00	F – 10
11H–81844–00	F – 10
1FK–81847–00	F – 10
5KM–81890–00	F – 10
4SV–81940–12	G – 3
5DM–81950–00	G – 3
29U–81950–93	G – 3
5BN–81960–00	G – 2
3WP–81980–00	G – 3
4SH–82100–22	G – 2
5FU–82103–00	G – 2
5KM–82109–00	G – 4
5GH–82114–00	G – 4
5KM–82115–00	G – 3
5KM–82116–00	G – 3
371–82121–00	G – 3
5KM–82128–00	G – 2
5KM–82129–00	G – 3
1AE–82151–00	G – 3
5JJ–82151–10	G – 3
5JJ–82151–30	G – 3
5JJ–82151–50	G – 3
5GT–82180–00	G – 3
5KM–82309–00	G – 3
3KJ–82310–10	G – 2
3YF–82370–00	G – 2
5KM–82507–00	G – 3
5HA–82509–00	G – 2
5KM–82509–10	G – 4
5KM–82510–00	G – 3
5KM–82530–00	G – 3
5KM–82540–00	G – 2
5LP–82540–01	G – 2
5KM–82541–00	G – 3
5GH–8254B–00	G – 3
5GM–82560–00	G – 2
5GT–82560–00	G – 3

PART NO.	GRID NO.
5KM–82560–00	G – 2
1AJ–82560–01	G – 2
3HN–82569–00	G – 3
3HN–82579–00	G – 3
5KM–82590–20	G – 3
5KM–82590–30	G – 3
5KM–82910–01	F – 15
1YW–82911–02	F – 15
2XJ–82913–00	F – 15
4V4–82913–00	F – 3
5KM–82917–00	F – 15
4WV–83371–00	G – 5
5KM–83500–40	F – 11
5KM–83500–50	F – 11
5UG–83755–01	G – 2
4TR–83790–00	G – 2
1UY–83909–00	F – 15
23X–83912–00	F – 15
5KM–83922–00	F – 4
437–83936–01	G – 4
5KM–83941–00	F – 15
3L4–83943–00	F – 15
5KM–83972–00	F – 15
4GB–83976–00	F – 15
5KM–83976–00	F – 3
5LP–83980–00	F – 4
4KB–84314–01	F – 12
5KM–84320–01	F – 12
2GU–84332–00	F – 12
2GU–84334–00	F – 12
5EH–84340–00	F – 12
5KM–84703–00	F – 12
5KM–84710–00	F – 13
	F – 14
1A2–84714–41	F – 13
	F – 14
5KM–8472C–10	F – 13
	F – 14
5GH–84751–10	F – 14
2EK–85111–00	G – 6
3Y6–85130–02	G – 6
449–85131–02	G – 6
5KM–85540–10	G – 2
5KM–85752–00	E – 8
4US–85753–00	E – 8
2JG–85757–00	E – 8
8CR–W0041–00	F – 4
5KM–W0042–50	F – 6

PART NO.	GRID NO.
4WV–W0045–00	E – 13
5KM–W0046–01	F – 2
3GD–W0047–00	E – 13
5KM–W0047–00	F – 2
1UY–W0048–50	E – 13
	F – 2
3GD–W0057–00	E – 13
5KM–W0057–00	F – 2
5KM–W2151–00	D – 9
5KM–W2151–10	D – 9
5KM–W2151–40	D – 9
5KM–W215B–00	D – 9
5KM–W215B–10	D – 9
5KM–W215B–30	D – 9
5KM–W215C–00	D – 9
5KM–W215C–10	D – 9
5KM–W215C–40	D – 9
5KM–W215D–00	D – 9
5KM–W215E–30	D – 9
5KM–W2161–01	D – 11
5KM–W2161–11	D – 11
5KM–W2161–41	D – 11
5KM–W216B–01	D – 11
5KM–W216B–11	D – 11
5KM–W216B–31	D – 11
5KM–W216C–01	D – 11
5KM–W216C–11	D – 11
5KM–W216C–41	D – 11
5KM–W216D–31	D – 11
5KM–Y1754–10	C – 15
5KM–Y4612–00	D – 14
90101–10568	B – 5
90105–06023	B – 9
90105–06031	C – 5
	C – 7
90105–07004	B – 8
90105–08538	E – 13
90105–09647	B – 4
90105–09648	B – 2
90105–10051	D – 7
90105–10286	E – 6
90105–10300	D – 7
90105–10323	D – 13
90105–10388	E – 5
	E – 6
90105–10480	E – 15
90105–10549	E – 6
90105–10634	F – 2

PART NO.	GRID NO.
90105–10649	B – 4
90105–10650	B – 4
90105–14367	D – 3
90109–06038	F – 2
90109–060F3	D – 11
90109–063E8	B – 7
90109–063E9	B – 2
90109–063F1	D – 8
	D – 9
	D – 12
	F – 5
	F – 7
90109–063F5	D – 8
	D – 10
	F – 5
90109–06723	G – 2
90109–06799	F – 15
90109–08021	E – 13
90109–14002	D – 3
90110–06039	B – 8
90110–06093	B – 3
90113–08004	E – 3
90114–10010	E – 11
	E – 14
90119–05071	E – 8
90119–06044	G – 2
90119–06056	C – 8
	D – 9
	D – 11
	D – 12
90119–06117	D – 13
90123–08046	F – 15
90149–04278	F – 3
90149–05321	D – 3
90149–06011	E – 8
90149–06021	D – 10
	F – 5
90149–08152	C – 15
90149–08296	F – 5
90150–06021	E – 13
90151–05023	C – 7
90154–05004	F – 12
90157–04088	C – 11
90159–05022	F – 12
90167–05025	F – 8
90170–06128	B – 7
90170–08358	D – 5
90170–10186	E – 7

PART NO.	GRID NO.
90170–18003	B – 6
90170–36279	C – 12
90171–10046	E – 6
	E – 7
90173–06015	C – 3
90179–08148	F – 15
90179–08410	C – 3
90179–10007	E – 11
	E – 14
90179–12325	D – 14
90179–16001	C – 11
90179–16661	C – 15
90179–20006	E – 11
	E – 14
90179–22005	C – 11
90179–22526	C – 15
90179–55660	D – 2
90179–60001	C – 15
90179–65001	D – 14
90183–05008	F – 12
90183–05024	G – 6
90183–06053	C – 8
	E – 6
90185–10060	D – 13
	E – 5
	E – 6
	E – 15
90185–14070	D – 2
	E – 7
90201–03313	G – 7
	G – 8
	G – 10
	G – 11
	G – 12
90201–047R9	C – 11
90201–06008	D – 5
90201–06042	F – 7
90201–06071	F – 5
90201–06074	F – 13
	F – 14
90201–06557	D – 10
	F – 5
90201–06778	C – 3
90201–07081	D – 10
90201–08016	G – 2
90201–08083	F – 6
90201–08087	D – 15
90201–086J0	C – 3

PART NO.	GRID NO.
90201–08784	F – 5
90201–096J9	B – 2
	B – 4
90201–10118	F – 4
	F – 6
90201–101A4	B – 4
90201–101J1	D – 7
90201–10321	B – 5
90201–10430	E – 6
90201–12191	D – 14
90201–127J6	D – 3
90201–132G5	D – 5
90201–14226	E – 7
90201–144J2	F – 5
90201–14633	D – 2
	E – 3
90201–170M2	C – 15
90201–17255	C – 13
90201–190T7	C – 11
90201–20278	C – 13
90201–20792	D – 3
90201–25291	C – 10
90206–12075	B – 7
90206–14086	F – 5
90209–06174	B – 11
90209–08249	C – 3
90209–22082	C – 13
90215–18001	B – 6
90240–06076	F – 7
90240–08013	F – 6
90267–32004	G – 7
	G – 8
	G – 10
	G – 11
	G – 12
90269–05055	D – 5
90269–07076	D – 9
	D – 12
	E – 8
90280–16053	B – 5
90282–05005	B – 5
90338–08226	B – 12
	G – 2
90338–09130	D – 11
90338–12081	D – 6
90340–10001	E – 4
90340–14029	E – 4
90340–14046	D – 15

PART NO.	GRID NO.
90340–14117	B – 2
	C – 7
90340–14132	B – 13
90340–18101	B – 2
90340–20143	D – 14
90381–17067	E – 15
90387–060A7	B – 11
90387–0613B	D – 5
90387–061V4	C – 3
90387–06648	D – 9
90387–066J1	E – 8
90387–075H4	E – 8
90387–090R0	E – 7
90387–250R3	C – 13
90387–26001	C – 13
90401–06001	B – 3
90401–08004	B – 13
90401–10159	B – 13
	F – 4
	F – 6
90401–14118	B – 13
90401–20145	B – 13
90413–05014	G – 4
90430–06014	B – 9
90430–06192	B – 3
90430–08204	B – 13
90430–10003	E – 4
90430–10148	G – 2
90430–10188	B – 13
90430–14043	B – 13
	D – 4
90430–14194	D – 3
90445–07176	G – 4
90445–07371	E – 2
	E – 4
	G – 4
90445–09023	E – 8
90445–09220	F – 13
	F – 14
90445–09635	D – 12
90445–096F4	D – 12
90446–06001	B – 9
90446–09155	G – 4
90446–16001	D – 6
90450–32008	C – 3
90450–32015	B – 10
90450–65001	B – 12
90450–67001	B – 12

PART NO.	GRID NO.
90460–15126	G – 4
90460–59211	B – 12
90460–75020	B – 12
90460–81224	C – 8
90460–85135	C – 8
90462–08008	B – 10
90464–07001	G – 4
90464–12045	G – 4
90464–12089	G – 4
90464–13073	G – 4
90464–14M55	G – 4
90464–15157	G – 4
90464–15195	G – 4
90464–35047	G – 4
90465–05M87	C – 7
90465–08361	C – 7
90465–10026	D – 5
90465–10098	G – 4
90467–06194	B – 9
	C – 2
90467–07029	E – 2
	E – 4
90467–08003	D – 12
90467–08021	G – 5
90467–10038	B – 10
90467–11044	F – 7
90467–12053	E – 8
90467–14015	C – 5
90467–14057	F – 7
90467–15012	D – 6
90467–16195	C – 8
90467–22080	B – 12
90467–26189	B – 10
90468–15139	G – 4
90468–16191	E – 7
90480–01009	C – 3
90480–01400	E – 8
90480–13018	C – 7
90480–13398	C – 8
90480–13567	D – 12
90480–15235	B – 11
90480–18290	B – 12
	E – 8
90480–18418	F – 7
90501–05001	B – 8
90501–06022	D – 3
90501–10353	D – 3
90501–12004	D – 4

PART NO.	GRID NO.
90501–12016	D – 3
90501–16002	D – 3
90501–18002	D – 15
90501–200A0	E – 4
90501–220A1	B – 5
90501–65001	C – 12
90506–12441	F – 5
90506–16318	F – 5
90508–32018	D – 3
90508–35764	D – 5
90793–26092	G – 2
91317–05012	F – 9
91317–06010	B – 10
	F – 4
91317–06012	B – 13
91317–06016	G – 2
91317–06018	B – 2
91317–06020	B – 10
	B – 12
91317–06025	B – 2
91317–06040	B – 2
	B – 4
91317–06050	B – 2
91317–06055	B – 2
91317–06115	B – 2
91317–06130	B – 2
91317–08016	C – 10
91317–08020	E – 3
91317–08040	C – 5
91317–10025	D – 8
91380–06010	C – 3
91401–16012	F – 6
91401–20012	F – 7
91401–20020	E – 6
	E – 7
91A20–07010	C – 2
92907–04600	C – 2
	F – 3
92907–05100	F – 3
	F – 15
	G – 6
92907–05200	G – 6
92907–06100	F – 15
92907–06600	B – 2
	B – 8
	B – 11
	C – 9
	F – 9

PART NO.	GRID NO.
92907–06600	G – 2
92907–08600	C – 15
	D – 15
92990–10600	E – 7
93101–10090	B – 9
93101–12168	C – 6
93101–35001	C – 11
93102–15212	D – 5
93102–20108	B – 6
93102–24034	E – 3
93102–25081	D – 7
93102–25099	D – 7
93102–28476	C – 7
93102–30170	C – 15
93102–35004	C – 5
93102–35009	D – 14
93102–42004	C – 13
93102–44454	D – 2
93102–48012	E – 3
93102–65004	D – 15
93104–09025	F – 3
93104–41119	C – 11
93112–31011	E – 7
93210–08521	B – 7
93210–10096	B – 13
93210–13657	B – 2
93210–14359	E – 3
93210–14369	C – 7
93210–14579	B – 13
93210–15620	F – 6
93210–16290	B – 5
93210–19026	C – 5
93210–19123	D – 14
93210–19522	B – 3
93210–21190	B – 10
93210–26001	C – 13
93210–29196	G – 2
93210–32172	B – 2
93210–321A8	B – 12
93210–33133	B – 9
93210–33786	B – 10
93210–41041	D – 8
93210–44545	B – 12
	C – 11
93210–626A7	D – 14
93210–71360	B – 2
93210–78544	C – 15
93210–82001	E – 4

PART NO.	GRID NO.
93210–975A9	G – 4
93211–01467	B – 4
93211–40040	E – 4
93211–51749	D – 15
93211–594A4	C – 11
93305–00601	E – 11
	E – 15
93306–00006	B – 9
93306–00612	C – 13
93306–00709	E – 4
93306–07801	C – 7
93306–20120	C – 6
93306–20221	C – 13
93306–20321	C – 13
93306–20331	D – 7
93306–20332	C – 13
93306–20597	D – 2
93306–20715	C – 15
93306–30318	C – 14
93306–30432	B – 6
93306–30534	B – 6
93306–30537	C – 15
93306–30574	D – 14
93306–30702	B – 5
93306–37206	C – 15
93306–91201	E – 4
93310–212R6	C – 10
93310–420F2	C – 13
93310–637D3	B – 5
93315–21813	C – 11
93316–00702	E – 4
93316–01003	C – 5
93316–01701	D – 15
93317–85569	D – 14
93410–20038	C – 13
	D – 3
93410–22039	D – 15
93410–46079	C – 11
93440–10085	B – 2
93440–25084	C – 13
93450–22119	E – 12
93450–24028	B – 5
93450–24062	C – 11
93503–08007	D – 3
93603–21180	B – 8
93604–18100	D – 3
93606–09002	B – 5
93612–16254	B – 4

PART NO.	GRID NO.
93700–06004	E – 15
93900–00030	E – 11
	E – 14
94108–12008	E – 11
94108–12009	E – 11
94110–12008	E – 14
94110–12009	E – 14
94581–94070	B – 13
94591–53126	B – 8
94591–54034	C – 13
94701–00241	B – 2
94703–00241	B – 2
95027–06008	G – 3
95027–06012	B – 9
	B – 14
	C – 6
95027–06014	B – 13
	C – 5
	C – 7
95027–06016	D – 7
95027–06020	B – 10
	D – 5
95027–06030	C – 5
	C – 7
	D – 5
	F – 10
95027–06040	B – 13
	C – 5
	C – 7
95027–06045	B – 9
95027–06055	C – 5
95027–06065	B – 9
95027–08012	D – 15
95307–05600	G – 6
95307–05700	F – 3
95307–08700	D – 5
95307–10700	E – 7
95317–06600	D – 10
	F – 5
95337–10600	E – 6
95606–06100	F – 4
95607–05100	F – 3
95607–06100	F – 15
95607–10200	D – 7
	E – 5
95617–06100	F – 2
95617–08625	B – 2
95702–06500	C – 9

PART NO.	GRID NO.
95707–05500	F – 11
95707–06300	D – 10
	F – 5
	F – 13
	F – 14
95707–08500	D – 15
95807–06012	E – 6
95807–06016	D – 9
95807–06020	B – 11
	G – 2
95807–06030	E – 8
95807–08020	D – 6
95807–08040	C – 3
95817–06012	G – 5
95817–06016	C – 5
	D – 6
95817–06020	C – 3
95817–06035	D – 5
95817–08012	F – 5
95817–08014	E – 5
95817–08016	D – 7
95817–08020	D – 7
95817–08025	C – 3
	F – 5
	F – 6
95817–08030	C – 15
95817–10025	D – 15
95817–10030	D – 7
95827–06008	F – 6
95827–06012	D – 7
	F – 6
95827–06016	C – 3
	C – 7
95827–06020	C – 8
95827–06025	C – 7
	F – 4
	F – 6
95827–06030	C – 5
	C – 7
95827–06040	C – 6
95827–06050	C – 5
95827–08012	F – 8
95827–08014	F – 8
95827–08020	D – 8
95827–08030	E – 7
97007–06020	G – 2
97017–06010	B – 11
97017–06014	C – 9

PART NO.	GRID NO.
97017–08035	D – 14
97027–06016	B – 8
97027–08025	D – 15
97027–08030	C – 15
97027–08060	E – 7
97607–04114	C – 2
97707–50016	F – 8
97707–60016	G – 3
97707–60025	B – 12
	G – 2
98507–03014	E – 8
98507–03540	F – 12
98507–04008	B – 15
98507–04010	C – 2
98507–04014	C – 2
98507–04016	F – 3
98507–05008	B – 15
98507–05012	F – 15
98507–05020	F – 3
98507–05035	F – 15
98507–06010	C – 3
98507–06020	F – 15
98507–06030	F – 9
98706–04012	F – 4
98707–04018	E – 8
99001–10600	F – 5
99009–10400	B – 9
99009–11400	B – 13
99009–12400	D – 3
99009–19400	D – 15
99009–30400	E – 6
99009–35400	B – 5
99009–55500	E – 11
	E – 15
99009–80500	C – 5
99530–08012	D – 5
99530–10116	B – 2
	C – 5
	C – 7
99530–14016	B – 4

PART NO.	GRID NO.

PART NO.	GRID NO.

PART NO.	GRID NO.